Improvement of the stoping technology in mining magnetite quartzite by underground methods

Serhii Pysmennyi[1*], *Mykhaylo* Fedko[1], *Andrii* Peremetchyk[1], *Serhii* Chukharev[2], *Volodymyr* Pilchyk[3], and *Victor* Mutambo[4]

[1]Kryvyi Rih National University, Faculty of Mining and Metallurgy, 11 Vitaliia Matusevycha St., 50027 Kryvyi Rih, Ukraine
[2]National University of Water and Environmental Engineering, 11 Soborna St., 33028 Rivne, Ukraine
[3]SE "Eastern Mining and Processing Plant", 2 Horkoho St., 2, 52210 Zhovti Vody, Ukraine
[4]University of Zambia, Department of Mining Engineering, Great East Road Campus, P.O Box 32379 Lusaka, Zambia

Abstract. The ore deposits in Kryvyi Rih iron ore basin are mined using bulk ore and overlying rocks caving systems. These mining systems have a significant drawback, namely a 2 – 5% reduction in the iron content of the mined ore mass when mining rich ores and up to 15% when mining poor ores. Current technological solutions enable improvement of ore extraction values while increasing economic costs by 15 – 20%. Therefore, the present article proposes a technological solution that will improve extraction values for poor ores. The study conducted results in determining the optimal distance between drawpoints of the receiving level and substantiates location of additional workings in the footwall, which reduces ore losses and increases ore mass extraction values. The proposed technological solution will reduce ore losses by 10 – 15% of the standard losses and increase ore extraction values by 5 – 15%, while reducing iron content by 5 – 7% of the initial one. Thus, the study conducted proves that the use of an additional level located 30 – 35 m above the main receiving level allows reduction of ore losses from 27.39% to 21.19%, and the iron content in the extracted ore mass – by only 3% instead of 12%.

1 Introduction

In today's fiercely competitive international iron ore market, mining companies need to make targeted and continuous efforts to reduce production costs.

Main costs for extraction of iron ore raw materials include those for preparatory development and stoping operations. Therefore, reduction of these costs will result in ensuring lower costs for extracted raw materials, which in turn will lead to improved performance of mining companies.

Among the production processes that are part of stoping operations at the underground mine named after Kolachevskyi, ore haulage and drawing are the most efficient in terms of

*Corresponding author: psvknu@mail.com

financial performance. When drawing ore under overlying rocks within inclined limiting surfaces, some amount of ore is irretrievably lost on the footwall of the deposit – in the "dead" zone [1, 2].

In the mining and geological conditions of the Kolachevskyi mine as well as in Kryvyi Rih iron ore basin, about 80% of the iron ore reserves is mined by various systems with caving ore and host rocks [2 – 4].

Due to peculiarities of ore drawing, the Pivdennyi Magnetytovyi (South Magnetite) deposit is divided into three conditional areas: an area of the deposit that involves the earth surface subsidence; an area of the deposit that is located at the southern end of the ore body and an area of the deposit which is within the boundaries of the safety pillar for industrial and civil construction facilities. At the same time, ore drawing in the second and third areas is considered ore drawing under the limiting surfaces. In this case, ore loss figures are formed by planes that are at the natural ore slope angle.

When drawing ore under overlying rocks and within vertical limiting walls, ore losses occur in crests between draw ellipsoids. The crest height makes 3/4 of the critical height of the draw ellipsoid. The critical height is the one where ajacent drawpoints stop influencing particles of the material drawn.

The amount of ore loss in the "dead" zone is directly proportional to the thickness of the ore deposit, the footwall dip, and the height of the ore layer to be drawn. Therefore, addressing the issue of reducing ore losses in crests of the block bottoms and in the "dead" zone of the deposit footwall is of great theoretical and practical importance.

2 The choice of object to study

An over 100 km long part of Kryvyi Rih iron ore deposit enters Kryvyi Rih-Kremenchuk structural and facies zone and is a narrow band of metamorphic rocks stretching from south to north [5 – 7]. Changes in parameters of deposits in both the horizontal and vertical planes, as well as their morphological variety, are due to ore-controlling structural forms. At the same time, areas with thick ore bodies are replaced by thin bodies or ore-free areas [8].

Almost all deposits of rich ores are represented by hematite ores, which differ only in the ratio of iron-containing mineral variaties [9, 10]. Martite ores occurring in the northern part of Kryvyi Rih iron ore basin are characterized by 20 – 30 MPa higher compressive strength than that of ores in its southern part. The strength of rich ores decreases with depth.

More than half of iron ore reserves is represented by deposits with a horizontal thickness of 20 to 100 meters. At the same time, more than 80% of the reserves is classified as unstable or of medium stability. The poor ore deposits of Kryvbas are represented by different types of unoxidized magnetite quartzite. These deposits have a much higher thickness and strength of ore bodies.

The stability of rocks in underground structures depend on their physical and mechanical properties [11 – 13]. The most important properties of rocks that influence the choice of a technological solution for ore mining include their strength, fracture, and mineral composition [14 – 16]. Rocks that host rich iron ores are represented by hornstone and shists and are mostly unstable or of medium stability. Rocks that host poor iron ores are mostly stable and strong varieties.

Among possible options of mining systems for iron ore deposits, the one with caving of ore and overlying rocks is the most widely used. Mining systems with an open stoping space are applied when mining the second and third types of the areas of deposits. In these cases, only the ore is broken and it is assumed that no ore dilution occurs during ore drawing.

When rocks that host ore bodies are characterized as stable or of medium stability, and the ore deposit has a horizontal thickness of over 20 m, the surface mining systems are

applied. In case of unstable rocks that host ore bodies, sublevel options of mining systems are employed [17].

Given the mining, geological and technical conditions of iron ore in Kryvyi Rih iron ore basin, the most commonly used system is sublevel ore caving. Considering the ore reserves mining scheme, this system has the following options: breaking vertical, horizontal and inclined ore layers to the compensatory space or breaking without a compensatory slot. The large number of possible options of sublevel ore caving systems enables their classification [18, 19]. When employing a sublevel caving system, the amount of ore losses depends on mining-engineering factors [20].

Depending on the volume of the compensatory space, level mining systems are divided into level-room and level caving systems. At the same time, level-room systems include options with a compensatory space (room) volume of more than 30% of the total volume of the block; otherwise the system is referred to as a level caving one [21 – 23].

To extract iron ore, the underground mine "Ekspluatatsiina" of the JSC "Zaporizhzhia Iron Ore Plant" employs the level-room system with backfill. As mentioned above, the need to apply backfilling is caused by complex hydrogeological conditions.

Iron ore deposits in Siberia are characterized by ore bodies of low to one hundred meter thickness, dips of 60º to 80º and compressive strength of 120 – 180 MPa. During mining, more than 90% of the reserves are extracted by means of induced level caving with vibrodrawing and longhole breaking [24 – 26].

Low ore losses (8 – 12%) and high dilution levels (up to 30%) characterize the mining technology of mining enterprises in Gornaya Shoriya. Easy processing of iron ore enables mining of ores with high levels of dilution. At the same time, dry magnetic separation waste is used in the construction industry. Iron ore deposits in the Urals are characterized by a variety of types in terms of ore body sizes, occurrence conditions, ore and host rock composition. To develop them, a system of induced level caving and, to a small extent, a system of sublevel drifts are employed [27, 28].

The Korobkovske iron ore deposit in Kursk magnetic anomaly area employs a level-room mining system with vibratory ore drawing [29, 31]. Bakalsk mines apply the most common sublevel-room mining systems: "open rooms" and "rooms above drawpoints". Thick sections of deposits are mined using a room system with sublevel breaking by boreholes [32 – 34].

In Kazakhstan, iron ore is mined at the Sokolovskyi and the West Karazhal underground mines. The deposit has complex mining, geological and hydrogeological conditions. The dewatered areas of the deposit are mined applying the level-room mining system with ore delivery by blasting. The non-drained areas are backfilled [35, 36].

In Sweden, iron ore is mined out using a system of sublevel caving with end ore drawing.

3 Research methods

In the course of studying ore particles movement, a pioneer in the field of scientific study of ore drawing under destroyed overlying rocks S.S. Minaev describes a figure that determines the amount of ore drawn without dilution – the ellipsoid.

Determination of a formula to calculate ore extraction is another S.S. Minaev's finding while studying ore drawing from only one draw funnel [26, 37]. To determine the parameters of the ellipsoid and characterize the ore in terms of its physical and mechanical properties, the scientist proposes to use eccentricity.

G.M. Malakhov and V.V. Kulikov have also made a great contribution to studying the issue of ore drawing under caved rocks [38, 39].

As a result of a large number of laboratory and industrial tests, G.M. Malakhov, V.R. Bezukh and P.D. Petrenko describe in detail the theory and practice of ore drawing [40 – 42]. Their studying the movement of particles during ore drawing from both a single drawpoint and a series of drawpoints add to understanding of the ore drawing process. Their analysis of trajectories of particles-markers during ore drawing from one drawpoint enables determining the features of forming draw ellipsoids and draw funnels (Fig. 1).

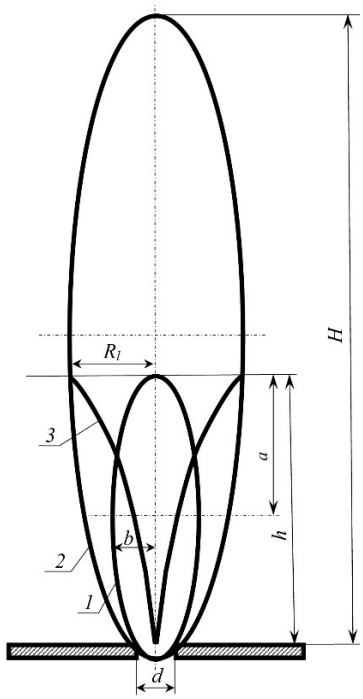

Fig. 1. Ore drawing from a single drawpoint: 1 – draw ellipsoid; 2 – loose ellipsoid; 3 – draw funnel; *a* is the draw ellipsoid major semi-axis; *b* is the draw ellipsoid minor semi-axis; *h* is the draw ellipsoid height; H_l is the loose ellipsoid height; R_d is the draw funnel radius; *d* is the drawpoint diameter.

Based on the results obtained, it is found that the volume of pure ore drawn from a single drawpoint is equal to that of the draw ellipsoid. In the course of further drawing, the drawn material is subsequently loosened and a loose ellipsoid is created. This fact causes a decline in the quality of the drawn ore due to inclusion of overlying rocks into the draw figure. Here, the draw funnel is understood as the surface of the ore-rock contact formed when the first rock particles reach the drawpoint [43 – 45].

Based on the diagram in Fig. 1, formulas for calculating the main parameters of the draw figure are determined.

The draw ellipsoid volume is determined by the formula

$$Q = \left(\frac{h}{2.73} + 0.85 \cdot d \right)^3, \text{ m}^3, \tag{1}$$

where *h* is the draw ellipsoid height; *d* is the drawpoint diameter.

The minor semi-axis of the draw ellipsoid is determined by the formula

$$b = 0.1515 \cdot h + 0.5 \cdot d \text{ , m.} \tag{2}$$

The major axis of the draw ellipsoid is determined by the formula

$$a = 0.51 \cdot h \text{, m.} \tag{3}$$

Describing these formulas, [1, 4] notes that they can be used only when the size of the drawpoint is from 1 m to 3 m and when the ratio of the ore layer to be drawn to the drawpoint diameter is more than 3 m. The radius of the draw funnel is determined by the formula

$$a = 0.51 \cdot h \text{, m,} \tag{4}$$

where H_l is the height of the loose ellipsoid; h is the height of the ore layer; ε is the eccentricity of the ellipsoid.

The identified influence of adjacent drawpoints enables determining possible options for ore drawing within one row of draw workings. The results of pilot and industrial tests to determine the influence of the sequence of work on caved ore drawing show that the best indicators of ore extraction can be received during steady sequential ore drawing. Step-by-step sequential ore drawing results in greater ore losses and dilution and, in general, reduces the amount of pure ore mined.

Examination of trajectories of particles under the influence of adjacent drawpoints, leads to the conclusion that draw ellipsoids' contacting and maintaining steady sequential ore drawing enable maintaining the horizontal contact of the ore with the overlying rocks during ore drawing. At the same time, after reaching a certain height, the horizontal contact changes to a wavy one and in the final phase it looks like a series of depressions in the form of funnels separated by crests of lost ore.

The height at which the influence of adjacent drawpoints starts disappearing is called the critical height. To calculate the critical height, the following formula is used

$$h_{kr} = k_{kr} \cdot (s - d) \text{, m,} \tag{5}$$

where $k_{\text{cr.}}$ is the empirical coefficient, which is 7.2 for fine ores and 3.3 for lump ores; s is the distance between the axes of the drawpoints; d is the diameter of the drawpoints.

To calculate ore losses in the crests, based on the experiments conducted, with steady sequential ore drawing before the start of its dilution, the height of the crests is determined by the following formula

$$h_{gr} = 0.75 \cdot h_{kr} \text{, m.} \tag{6}$$

When studying the process of ore drawing under surfaces that limit ore drawing, two possible options are considered: with stable and unstable hanging wall rocks. At the same time, when studying the patterns of ore drawing under stable rocks of the hanging wall, the influence of the hanging wall dip on ore extraction values is considered. Ore extraction under unstable rocks of the hanging wall is considered as an option of ore extraction under caved rocks.

As a result of studying the patterns of ore drawing under stable rocks of the hanging wall provided that the ratio of the height of the ore layer to the horizontal thickness is greater than the tangent of the ore deposit dip angle, it is assumed that after the draw ellipsoid reaches the limiting surface, further movement of the flow is parallel to the footwall (Fig. 2).

In accordance with Fig. 2, the radius of the draw funnel is determined by the formula

$$R_l = k_r \cdot h_N + 0.5 \cdot d \text{, m,} \tag{7}$$

where k_r is the coefficient that depends on the ore properties and is 0.14 for fine ores and 0.3 for lump ores; h_N is the height of the normal draw ellipsoid; d is the diameter of the drawpoint.

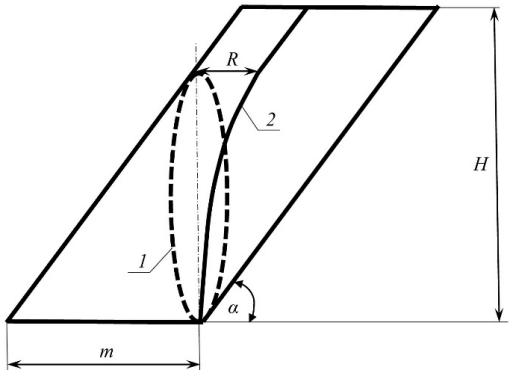

Fig. 2. Ore drawing under stable rocks of the hanging wall: 1 – draw ellipsoid; 2 – draw funnel; *H* is the height of the ore layer; *m* is the horizontal thickness of the ore deposit; *R* is the radius of the draw funnel; *α* is the angle of the deposit dip.

According to Fig. 2, the "dead" zone contains the losses of broken ore and is located on the footwall of the deposit beyond the ore drawing area.

Considerable attention is also paid to the issue of determining ore extraction values. The work conducted enables determining formulas for calculating ore dilution and ore extraction. The eccentricity of the draw ellipsoid is also used to calculate these indicators. To ensure that the best ore reserve extraction indicators can be achieved, a methodology is developed to determine the design parameters of the mining system, namely, for the sublevel caving system.

To study the ways of particle movement in a loose medium, V.V. Kulikov uses mathematical models rather than physical ones. The radius of curvature of the upper part of the ellipsoid is used to determine characteristics of the loose material. In addition, V.V. Kulikov developes his own version of the methodology for obtaining estimated ore extraction values.

When studying the ore drawing process, other scientists identify and propose other draw figures based on the modeling results [30]. For example, Yu.M. Chabdarova states that the ore drawing figure is a combination of an ellipsoid located in the upper part of the draw figure and a cone in the lower part of the draw figure [8].

I.P. Terekhov proposes the biparabolic cylinder shape of the ore drawing figure [31] and, on this basis, develops formulas for calculating ore drawing rates. In this case, it is not the eccentricity of the ellipsoid which is used to assess the physical and mechanical properties of the loose material, but the ratio of the size of the ore pieces and the rocks that overlie the ore. To obtain the best ore drawing rates, sequential ore drawing is suggested by a series of ore drawpoints. At that, the distance between drawpoints should be determined with due regard to ensuring the stability of the entire block bottom. In addition, according to I.P. Terekhov, the best ore extraction values are achieved when the ratio of the height of the layer drawn to its width is 2.5.

Studying the nature of the movement of particles of the loose medium, P.M. Wolfson also determines the shape of the drawpoint surface as a rotation ellipsoid. However, to determine the parameters of the draw ellipsoid it is proposed to use the the natural slope angle of the ore rather than the eccentricity [32] as the slope does not depend on the height of the ore layer and the depth of mining operations. This way of determining the volume of the draw ellipsoid is simpler than the one based on the eccentricity. This is explained by the fact that determining the angle of natural slope of the ore is easier than determining the eccentricity and it can be determined at the place of ore drawing.

Based on his studies of the dosed ore drawing, P.M. Wolfson proposes to calculate the critical height using the following formula

$$h_{kr} = 0.78 \frac{2 \cdot b}{tan^2 \frac{90 - \varphi}{2}}, \text{ m}, \tag{8}$$

where b is the major semi-axis of the draw ellipsoid; φ is the angle of natural ore slope, which is 38º – 40º for oxidized ores and 35º – 36º for magnetite ores.

Based on the research, the ratio between the ore particle and the diameter of the drawpoint is determined which prevents the possible clogging.

Summarizing the reviewed results of scientific papers dealing with ore drawing under caved rocks, it can be concluded that dimensions of blocks/panels should depend on the height of the caved ore layer and parameters of the ore drawing figures. At the same time, the width and length of the blocks/panels should be determined provided that ore drawing ellipsoids are in contact.

The amount of ore losses in crests of the block/panel bottom depends on the distance between the axes of the drawpoints and conditions of ore drawing. When ore is drawn under limiting surfaces, i.e. without overlying rocks, the height of the crests is formed, as noted above, by the angles of the natural ore slope. When ore is drawn under overlying rocks, the height of the crests is determined relative to the critical height of the draw ellipsoids.

The optimal distance between the axes of the drawpoints is the distance that ensures minimal costs associated with formation of the block bottom and its maintenance in accordance with the amount of ore losses in the crests of the block bottom.

Calculations performed in [46] enable determining the degree of influence of each of these factors on the amount of ore losses in the dead zone. When considering the results obtained, it can be stated that the height of the ore layer and, to a lesser extent, the difference between the angle of ore drawing and the angle of the footwall dip have the greatest impact on the amount of ore losses in the zone of influence of the footwall.

A variety of measures are used to reduce ore losses in the zone of influence of the footwall. Thus, to obtain the proper result, [46] proposes to use:

– separate mining of the ore and the “triangle” of waste rock in the footwall of the deposit;

– advance mining of the ore “triangle” in the footwall of the deposit;

– extraction of the ore “triangle” in the footwall of the deposit after extraction of block/panel reserves;

– creation of additional drawpoints in the footwall rocks.

When considering options for reducing ore losses in the zone of influence of the deposit footwall, each flowchart has its advantages and disadvantages. Implementation of the option with separate mining of ore and waste rock “triangle” in the footwall of the deposit involves moving the boundaries of ore drawing to a distance equal to the projection of the upper part of the ore massif to the undercutting level at the angle of ore drawing.

The advantages of this option include: improved conditions for breaking the ore massif due to the increased volume of the compensatory space, a significant reduction in ore losses in the zone of influence of the deposit footwall, and technological simplicity of the mining system.

The disadvantages include a significant additional amount of preparatory-development operations, the need for additional work on drilling, blasting and selective excavation of waste rock. Advance mining of the ore “triangle” in the footwall of the deposit, i.e. mining it first, involves creating an additional level above the main receiving level. Depending on the location of the intermediate ore drawing level, two options for the design of drawpoints

are possible: when the scraper drift is located in ore with double-sided drawpoints and when the scraper drift is located in footwall rocks with single-sided drawpoints.

The advantages of this option include a reduction in ore losses in the zone of influence of footwall. The disadvantages include: increased costs associated with creating and maintaining an additional receiving level, significant ore dilution associated with the low height of the ore layer for drawing under the caved rocks.

The option of extracting the ore "triangle" in the footwall of the deposit after extracting the block/panel reserves is usually employed in difficult mining and technical conditions. High rock pressure causes strains in the footwall rocks which deteriorates operating conditions at intermediate levels, namely, increased costs for maintaining the support of workings, possible partial or complete destruction and, as a result, a decrease in the amount of ore that is additionally drawn. The advantages of this option include only a slight reduction in ore losses in the zone of influence of the footwall.

Additional drawpoints are created in the footwall rocks of when the ore massif is completely destroyed within the extraction unit and has the following advantages: reduced ore losses in the zone of the footwall impact and relatively better conditions for major blasting. The disadvantages include: increased costs associated with creating and maintaining an additional receiving level, possible increase in ore dilution due to possible deviation of the vertical axis of the draw ellipsoid towards the mined-out space.

The experience of applying sublevel caving systems in Kryvbas demonstrate that the best results are obtained when employing the option of creating additional drawpoints in the footwall rocks and simultaneously drawing ore at the main and intermediate receiving levels.

This option allows reduction of the cost of maintaining an additional receiving level by reducing its operation time and improvement of conditions of drawing ore from the intermediate drawing level due to drawing from a vertical draw ellipsoid. The disadvantage is common to all the options considered, namely, increased costs associated with creating and maintaining an additional receiving level.

4 Research results

The calculation of ore losses in the crests of the block bottom is performed for the following initial data: weighted average height of the ore layer drawn under the overlying rocks – 71 m, distance between drawpoints – 20 m, bulk specific gravity of magnetite quartzite in the loosened state – 2.6 t/m^3, length of the access crosscut with the available VDPU-4TM – 140 m, conversion factor for concentrate – 3 to 1, cost of construction of VDPU-4TM – UAH 1.1 M, margin per 1t of concentrate – UAH 1.098.

To determine conditions for locating draw ellipsoids in the vertical projection, the minor axis of the draw ellipsoid is compared to the distance between the axes of the drawpoints. The value of the minor semi-axis of the draw ellipsoid is determined by (2)

$$b = 0.1515 \cdot 71 + 0.5 \cdot 3 = 11.5 \text{ m}.$$

Accordingly, the minor axis of the draw ellipsoid is 23 m.

Comparison of the size of the minor axis of the draw ellipsoid with the distance between the axes of the drawpoints shows that the draw ellipsoids of adjacent drawpooints cut each other. In this case, in accordance with (4), the height of the ore loss crest of the block bottom is equal to 3/4 of the critical height of the draw ellipsoid, which is determined by (3). The results of the calculation of ore losses in the crest of the block bottom, depending on the distance between the drawpoints, are shown in Table 1.

The pattern of changes in the amount of ore losses in the crest of the block bottom depending on the distance between drawpoints is shown in Fig. 3.

The results of the calculation of technical and economic indicators depending on the distance between drawpoints are shown in Table 2.

Table 1. Calculated data of ore losses in the crest of the block bottom.

Distance between drawpoints, m	Critical height, m	Height of crests, m	Ore volume in the crest, m^3	Ore losses in the crest, t
20	61.1	45.8	4792.4	12556.2
19	57.8	43.3	4091.4	10719.4
18	54.5	40.8	3462.2	9071.0
17	51.2	38.4	2901.0	7600.7
16	47.9	35.9	2404.0	6298.4
15	44.6	33.4	1967.2	5154.0
14	41.3	30.9	1586.7	4157.1
13	38.0	28.5	1258.7	3297.7
12	34.7	26.0	979.2	2565.5
11	31.4	23.5	744.4	1950.4
10	28.1	21.0	550.5	1442.3

Table 2. Calculated data of technical and economic indicators.

Distance between drawpoints, m	Number of VDPU-4TM, items	Investment cost for construction of VDPU-4TM, USD	Concentrate losses Q_{conc}, t	Margin profit minus Investment cost, USD
20	6	0	3766.8	0.00
19	7	27500	3215.8	-24945.57
18	7	27500	2721.3	-22646.35
17	8	55000	2280.2	-48088.92
16	8	55000	1889.5	-46259.85
15	8	55000	1546.2	-44645.70
14	9	82500	1247.1	-70733.04
13	10	110000	989.3	-97008.43
12	10	110000	769.7	-95958.45
11	11	137500	585.1	-122569.66
10	12	165000	432.7	-149328.62

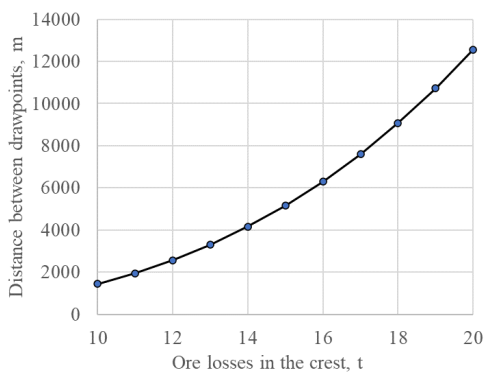

Fig. 3. Ore losses in the crest of the block bottom.

Taking into account the results obtained, it is not advisable to change the distance between drawpoints when drawing ore under overlying rocks. Changing the distance between the axes of the drawpoints is not advisable even with significantly higher ore losses compared to ore drawing under limiting surfaces. This result is also explained by the

insignificant amount of additional financial income from reducing ore losses in crests of the block bottom compared to the additional costs associated with the construction of additional VDPU-4TM vibratory conveyors.

Analysis of scientific sources enables concluding that the best results in reducing ore losses in the zone of influence of the footwall are obtained when applying the option of creating additional drawpoints in the footwall rocks and simultaneously drawing ore at the main and intermediate receiving levels. To determine efficiency of this option in the mining conditions of underground mine named after M.V. Kolachevskyi, when using an intermediate receiving level, ore losses are calculated and compared to those resulted from employing the traditional level-room mining system of the mentioned mine. The calculations are based on the design data for mining the block within axes (-19) – (-26) at level 527 – 447 m of the footwall.

To calculate the ore extraction values, the instruction on rationing, forecasting and accounting of reserve extraction rates in mining of magnetite quartzite deposits of the field of the underground mine named after M.A. Kolachevskyi is followed [46]. It allows determining ore extracting values for both systems with ore and overlying rocks caving and systems with an open stoping space. At the same time, options for mining systems with and without collecting levels are considered. In addition, it is possible to calculate ore extraction for the mining system with an open stoping space, provided that the reserves of its constituent elements are separately extracted. The constituent components include a room, a crown, and inter-room and flanking pillars.

To determine efficiency of using the intermediate ccollecting level, the predicted values of ore loss and dilution are calculated in accordance with sections 10 and 11 of [46]. The initial data is determined for the corresponding mining conditions in accordance with the calculation schemes shown in Fig. 4.

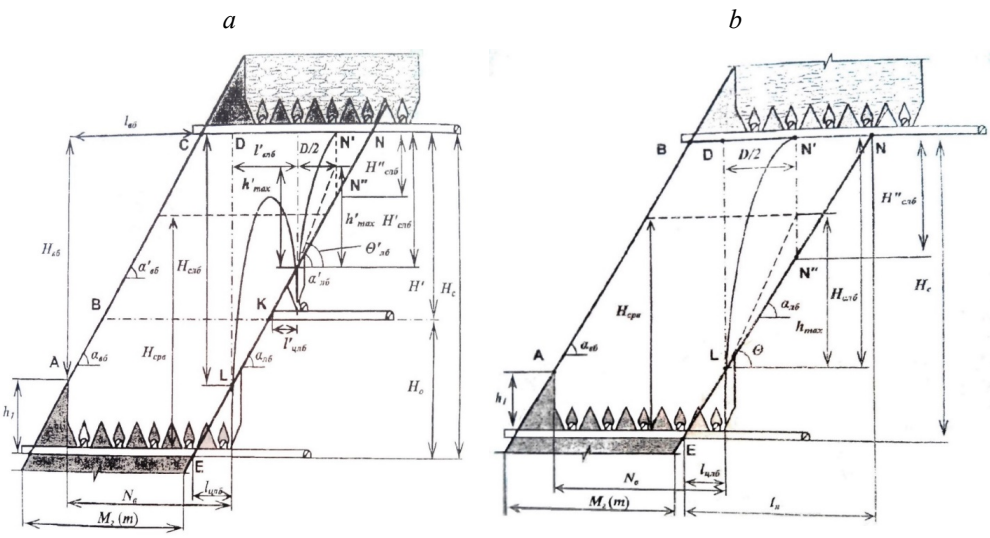

Fig. 4. Calculation scheme of the system for level ore and overlying rock caving: (a) with a collecting level; (b) without a collecting level.

To determine the optimal location for the collecting level, ore extraction values are calculated for the following levels relative to the main receiving levels: 10 m, 15 m, 20 m, 25 m, 30 m, 35 m, 40 m, 45 m, 50 m. The results of the calculations are presented in Tables 3 and 4.

Table 3. Results of calculation of ore extraction values.

Parameter	With additional level	Without additional level
Balance reserve, kt	913.03	913.03
Fe_{mg} content in balance reserve, %	28.57	28.57
Extraction reserve, kt	913.03	913.03
Fe_{mg} content in extraction reserve, %	28.57	28.57
Ore loss ratio, %	21.19	27.39
Weight of lost ore in extraction reserve, kt	193.471	250.079
Dilution coefficient, %	16.71	9.21
Weight of diluted ore, kt	144.329	67.272
Visible extraction ratio, unit fractions.	0.946	0.8
Ore mass mined, kt	863.726	730.424
Fe_{mg} content in ore mass mined, %	25.25	26.74
Pure ore extraction ratio, unit fractions	0.603	0.777
Ore mass mined in pure form, kt	520.827	567.539
Diluted ore mass mined, kt	342.899	162.885
Fe_{mg} content in diluted ore mass, %	20.21	20.36
Extraction reserve ore dilution ratio, %	11.6	6.4

Table 4. Summary of calculation results.

Height of collecting sublevel, m	Ore losses, %	Ore dilution, %	Ore mined, t	Magnetite iron content in mined ore, %	Tonne-percentage, t.%
0	27.39	9.21	730424	26.74	19531537.76
10	21.35	9.16	790684	26.75	21150797.00
15	20.49	10.12	808032	26.56	21461329.92
20	19.67	10.87	822640	26.41	21725922.40
25	19.26	11.83	836335	26.22	21928703.70
30	19.07	12.68	846379	26.05	22048172.95
35	19.37	13.84	854596	25.82	22065668.72
40	20.70	15.20	860987	25.55	21998217.85
45	21.19	16.71	863726	25.25	21809081.50
50	23.21	18.87	864639	24.82	21460339.98

The pattern of changes in ore losses due to changes in the collecting level height is shown in Fig. 5.

Analysis of Fig. 5 allows the conclusion that the lowest amount of ore losses corresponds to the option of the mining system with caving ore and overlying rocks which employs a collecting level located 30 m above the main receiving level.

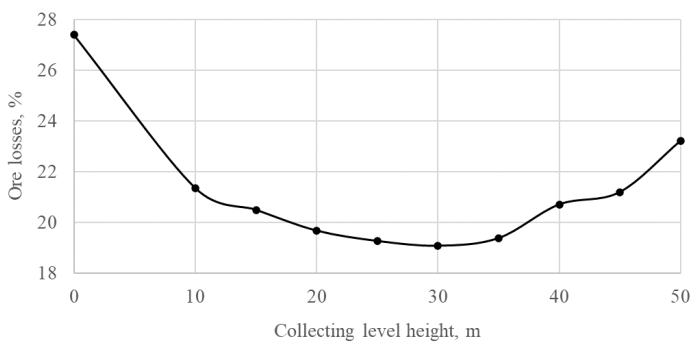

Fig. 5. Changes in ore losses due to changes in the collecting level height.

As noted above, magnetite quartzite mined at the mine named after Kolachevskyi is not a final product but requires processing at the mining and processing plant, so the best option should be determined based not on the level of ore losses but on the maximum iron content in the mined ore. In other words, the best option is the one with the highest tonne-percentage. Tonne-percentage changes depending on the change in the collecting level height are shown in Fig. 6.

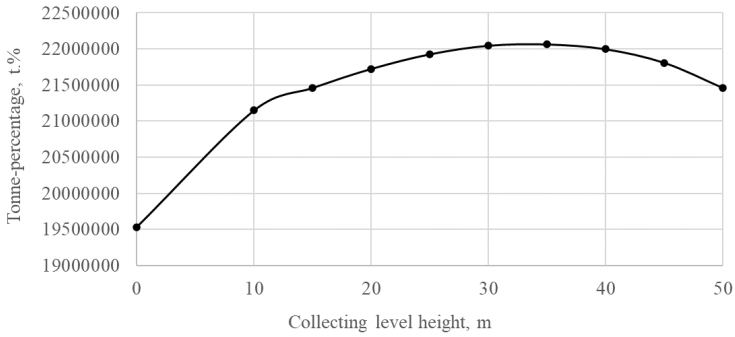

Fig. 6. Changes in tonne-percentage depending on changes in the location of the collecting level.

As is seen in Fig. 6, the highest tonne-percentage corresponds to the option of the mining system with caving ore and overlying rocks which employs a collecting level located 35 m above the main receiving level.

The findings support the feasibility and efficacy of the proposed technological solution within the operational context of the Kolachevskyi mine. By optimizing drawpoint arrangements and incorporating additional levels, mining operations can achieve substantial improvements in efficiency, minimizing losses, and maximizing the extraction of valuable ore resources. These advancements represent a significant step forward in enhancing the sustainability and economic viability of ore mining practices within the Kryvyi Rih basin.

5 Conclusions

The results of this study underscore the potential for significant improvements in ore extraction efficiency within the Kryvyi Rih iron ore basin, particularly in addressing the challenges associated with mining poor ores. By carefully considering the arrangement of drawpoints at the receiving level and introducing an additional receiving level positioned strategically above the main one, notable reductions in ore losses and enhancements in extraction values can be achieved.

Specifically, the optimization of drawpoint distances and the introduction of supplementary workings in the footwall have been identified as key strategies for mitigating ore losses and increasing the overall mass extraction yield. This proposed technological solution promises a reduction in ore losses by an estimated 10 – 15% compared to conventional methods, while simultaneously enhancing ore extraction values by 5 – 15%. Furthermore, the study demonstrates that the implementation of an additional level situated 30 – 35 meters above the primary receiving level yields tangible benefits. Notably, this approach leads to a reduction in ore losses from 27.39% to 21.19%, accompanied by a minimal decrease in the iron content of the extracted ore mass, mitigating the typical 12% reduction to a mere 3%.

References

1. Stupnik, M.I., Kalinichenko, O.V., & Kalinichenko, V.O. (2012). Economic evaluation of risks of possible geomechanical violations of original ground in the fields of mines of Kryvyi Rih basin. *Naukovyi Visnyk Natsionalnoho Hirnychoho Universytetu*, (6), 126-130.
2. Fedko, M.B., Muzyka, I.O., Pysmennyi, S.V. & Kalinichenko, O.V. (2019). Determination of drilling and blasting parameters considering the stress-strain state of rock ores. *Naukovyi Visnyk Natsionalnoho Hirnychoho Universytetu*, (1), 37-41. https://doi.org/10.29202/nvngu/2019-1/20
3. Pysmennyi, S., Fedko, M., Chukharev, S., Rysbekov, K., Kyelgyenbai, K., & Anastasov, D. (2022). Technology for mining of complex-structured bodies of stable and unstable ores. *IOP Conference Series: Earth and Environmental Science*, *970*(1), 012040. https://doi.org/10.1088/1755-1315/970/1/012040
4. Stupnik, M., Kalinichenko, V., Fedko, M., Pysmennyi, S., Kalinichenko, O., & Pochtarev, A. (2022). Methodology enhancement for determining parameters of room systems when mining uranium ore in the SE "SkhidGZK" underground mines, Ukraine. *Mining of Mineral Deposits*, *16*(2), 33-41. https://doi.org/10.33271/mining16.02.033
5. Peregudov, V., Hryhoriev, I., Joukov, S., & Hryhoriev, Y. (2020). Determination of the transfer step of the ore chute while mining the technogenic deposit of the bulk type. *E3S Web of Conferences*, (166), 02004. https://doi.org/10.1051/e3sconf/202016602004
6. Bazaluk, O, Petlovanyi, M, Zubko, S., Lozynskyi, V., & Sai, K. (2021). Instability Assessment of Hanging Wall Rocks during Underground Mining of Iron Ores. *Minerals*, *11*(8), 858. https://doi.org/10.3390/min11080858
7. Petlovanyi, M.V., Zubko, S.A., Popovych, V.V., & Sai, K.S. (2020). Physicochemical mechanism of structure formation and strengthening in the backfill massif when filling underground cavities. *Voprosy Khimii i Khimicheskoi Technologii*, (6), 142-150. https://doi.org/10.32434/0321-4095-2020-133-6-142-150
8. Stupnik, M.I., Kalinichenko, O.V., & Kalinichenko, V.O. (2012). Technical and economic study of self-propelled machinery application expediency in mines of krivorozhsky basin. *Naukovyi Visnyk Natsionalnoho Hirnychoho Universytetu*, (5), 39-42.
9. Pysmenniy, S., Shvager, N., Shepel, O., Kovbyk, K., & Dolgikh, O. (2020). Development of resource-saving technology when mining ore bodies by blocks under rock pressure. *E3S Web of Conferences*, (166), 02006. https://doi.org/10.1051/e3sconf/202016602006.
10. Stupnik, N.I., Fedko, M.B., Kolosov, V.A., & Pismennyy, S.V. (2014). Razrabotka rekomendatsiy po vyboru tipa krepleniya gornykh vyrabotok i sopryazheniy v uslovii uranovykh shakht GP "VOSTGOK". *Naukovyi Visnyk Natsionalnoho Hirnychoho Universytetu*, (5), 21-25.
11. Bazaluk, O., Sadovenko, I., Zahrytsenko, A., Saik, P., Lozynskyi, V., & Dychkovskyi, R. (2021). Forecasting Underground Water Dynamics within the Technogenic Environment of a Mine Field: Case Study. *Sustainability*, *13*(13), 7161. https://doi.org/10.3390/su13137161
12. Falshtynskyi, V.S., Dychkovskyi, R.O., Saik, P.B., Lozynskyi, V.G., & Cabana, E.C. (2017). Formation of thermal fields by the energy-chemical complex of coal gasification. *Naukovyi Visnyk Natsionalnoho Hirnychoho Universytetu*, (5), 36-42.
13. Bazaluk, O., Lozynskyi, V., Falshtynskyi, V., Saik, P., Dychkovskyi, R., & Cabana, E. (2021). Experimental Studies of the Effect of Design and Technological Solutions on the Intensification of an Underground Coal Gasification Process. *Energies*, *14*(14), 4369. https://doi.org/10.3390/en14144369
14. Bolatova, A., & Kuttybayev, A. (2022). Use of mining and metallurgical waste as a backfill of worked-out spaces. *Series of geology and technical sciences*, *1*(451), 33-38. https://doi.org/10.32014/2022.2518-170x.137
15. Stupnik, M., Kalinichenko, V., Kalinichenko, O., Shepel, O., & Hryshchenko, M. (2023). Scientific and technical problems of transition from open pit to combined technologies for raw materials mining. *IOP Conference Series: Earth and Environmental Science*, *1254*(1), 012070. http://dx.doi.org/10.1088/1755-1315/1254/1/012070

16. Chepushtanova, T.A., Yulussov, S.B., Baigenzhenov, O.S., Khabiyev, A.T., & Merkibayev, Y.S., Mishra, B. (2024). Review of methods for processing ore vanadium-containing raw materials. *Engineering Journal of Satbayev University*, *146*(1), 15-22. https://doi.org/10.51301/ejsu.2024.i1.03
17. Saik, P., Cherniaiev, O., Anisimov, O., Dychkovskyi, R., & Adamchuk, A. (2023). Mining of non-metallic mineral deposits in the context of Ukraine's reconstruction in the war and post-war periods. *Mining of Mineral Deposits*, *17*(4), 91-102. https://doi.org/10.33271/mining17.04.091
18. Stupnik, M., Kalinichenko, V., Kalinichenko, O., & Pochtarev, A. (2021). Technological measures to enhance efficiency of mining ore from stopes applying self-propelled equipment. *E3S Web of Conferences*, (280), 08010. http://dx.doi.org/10.1051/e3sconf/202128008010
19. Morkun, V., Morkun, N., & Tron, V. (2015). Identification of control systems for ore-processing industry aggregates based on nonparametric kernel estimators. *Metallurgical and Mining Industry*, *7*(1), 14-17.
20. Kassymkanova, K.K., Istekova, S., Rysbekov, K., Amralinova, B., Kyrgizbayeva, G., Soltabayeva, S., & Dossetova, G. (2023). Improving a geophysical method to determine the boundaries of ore-bearing rocks considering certain tectonic disturbances. *Mining of Mineral Deposits*, *17*(1), 17-27. https://doi.org/10.33271/mining17.01.017
21. Khussan, B., Abdiev, A., Bitimbayev, M., Kuzmin, S., Issagulov, S., & Matayev, A. (2022). Substantiation and development of innovative container technology for rock mass lifting from deep open pits. *Mining of Mineral Deposits*, *16*(4), 87-95. https://doi.org/10.33271/mining16.04.087
22. Stupnik, M., Kalinichenko, V., Fedko, M., Kalinichenko, O., Hryshchenko, M. (2020). The study of the stress-strain state of the massif in mining uranium at VOSTGOK deposits. *E3S Web of Conferences*, (166), 03005. https://doi.org/10.1051/e3sconf/202016603005
23. Stupnik, M., & Kalinichenko, O. (2018). Investigation of muck drawing in blocks with trapezoid sills. *E3S Web of Conferences*, (60), 00021. https://doi.org/10.1051/e3sconf/20186000021
24. Kononenko, M., & Khomenko, O. (2010). Technology of support of workings near to extraction chambers. *New Techniques and Technologies in Mining – Proceedings of the School of Underground Mining*, 193-197. http://doi.org/10.1201/b11329-32
25. Tsoy, B.V., Myrzakhmetov, S.S., Bekbotaeva, A.A., & Yusupov, Kh.A. (2022). New geophysical logging techniques for practical problem solving at complex hydrogenetic uranium deposits. *Gornyi Zhurnal*, (7), 27-31. https://doi.org/10.17580/gzh.2022.07.04
26. Morkun, V., & Tron, V. (2014). Automation of iron ore raw materials beneficiation with the operational recognition of its varieties in process streams. *Metallurgical and Mining Industry*, *6*(6), 4-7.
27. Kononenko, M., & Khomenko, O. (2021). New theory for the rock mass destruction by blasting. *Mining of Mineral Deposits*, *15*(2), 111-123. https://doi.org/10.33271/mining15.02.111
28. Stupnik, M., Fedko, M., Hryshchenko, M., Kalinichenko, O., & Kalinichenko, V. (2023). Study of Compensation Room Impacts on the Massif Stability and Mined Ore Mass Quality. *Inzynieria Mineralna*, (1), 129-135.
29. Sdvyzhkova, O., Moldabayev, S., Bascetin, A., Babets, D., Kuldeyev, E., Sultanbekova, Zh., Amankulov, M., & Issakov, B. (2022). Probabilistic assessment of slope stability at ore mining with steep layers in deep open pits. *Mining of Mineral Deposits*, *16*(4), 11-18. https://doi.org/10.33271/mining16.04.011
30. Wang, J., Apel, D.B., Dyczko, A., Walentek, A., Prusek, S., Xu, H., & Wei, C. (2022). Analysis of the damage mechanism of strainbursts by a global-local modeling approach. *Journal of Rock Mechanics and Geotechnical Engineering*, *14*(6), 1671-1696. https://doi.org/10.1016/j.jrmge.2022.01.009
31. Rysbekov, K., Bitimbayev, M., Akhmetkanov, D., Yelemessov, K., Barmenshinova, M., Toktarov, A., & Baskanbayeva, D. (2022). Substantiation of mining systems for steeply dipping low-thickness ore bodies with controlled continuous stope extraction. *Mining of Mineral Deposits*, *16*(2), 64-72. https://doi.org/10.33271/mining16.02.064

32. Malanchuk, Z.R., Moshynskyi, V.S., Korniienko, V.Y., Malanchuk, Y.Z., & Lozynskyi, V.H. (2019). Substantiating parameters of zeolite-smectite puff-stone washout and migration within an extraction chamber. *Naukovyi Visnyk Natsionalnoho Hirnychoho Universytetu*, (6), 11-18. https://doi.org/10.29202/nvngu/2019-6/2
33. Stupnik, M., Oliinyk, T., Pochtarev, A., Kalinichenko, O., & Kalinichenko, V. (2023). Enhancement of the quality of marketable iron ore products of Kryvyi Rih iron ore basin. *IOP Conference Series: Earth and Environmental Science*, *1156*(1), 012031. https://doi.org/10.1088/1755-1315/1156/1/012031
34. Bazaluk, O., Rysbekov, K., Nurpeisova, M., Lozynskyi, V., Kyrgizbayeva, G., & Turumbetov, T. (2022). Integrated monitoring for the rock mass state during large-scale subsoil development. *Frontiers in Environmental Science*, (10), 852591. https://doi.org/10.3389/fenvs.2022.852591
35. Petlovanyi, M., Ruskykh, V., Zubko, S., & Medianyk, V. (2020). Dependence of the mined ores quality on the geological structure and properties of the hanging wall rocks. *E3S Web of Conferences*, (201), 01027. https://doi.org/10.1051/e3sconf/202020101027
36. Morkun, V., Morkun, N., & Pikilnyak, A. (2014). Modeling of ultrasonic waves propagation in inhomogeneous medium using fibered spaces method (k-space). *Metallurgical and Mining Industry*, *6*(2), 43-48.
37. Bazaluk, O., Anisimov, O., Saik, P, Lozynskyi, V., Akimov, O., & Hrytsenko, L. (2023). Determining the Safe Distance for Mining Equipment Operation When Forming an Internal Dump in a Deep Open Pit. *Sustainability*, *15*(7), 5912. https://doi.org/10.3390/su15075912
38. Khomenko, O., Kononenko, M., Kovalenko, I., & Astafiev, D. (2018). Self-regulating roof-bolting with the rock pressure energy use. *E3S Web of Conferences*, (60), 00009. http://doi.org/10.1051/e3sconf/20186000009
39. Petlovanyi, M., & Mamaikin, O. (2019). Assessment of an expediency of binder material mechanical activation in cemented rockfill. *ARPN Journal of Engineering and Applied Sciences*, *14*(20), 3492-3503.
40. Khomenko, O., Kononenko, M., & Lyashenko, V. (2018). Safety Improving of Mine Preparation Works at the Ore Mines. *Occupational Safety in Industry*, (5), 53-59. http://doi.org/10.24000/0409-2961-2018-5-53-59
41. Morkun, V., Morkun, N., & Pikilnyak, A. (2014). The adaptive control for intensity of ultrasonic influence on iron ore pulp. *Metallurgical and Mining Industry*, *6*(6), 8-11.
42. Stupnik, N., Kalinichenko, V., Pismennij, S., & Kalinichenko, E. (2015). Features of underlying levels opening at "ArsellorMittal Kryvyic Rih" underground mine. *New Developments in Mining Engineering 2015: Theoretical and Practical Solutions of Mineral Resources Mining*, 39-44.
43. *Mineralni resursy Ukrainy.* (2018). Kyiv, Ukraina: Derzhavne naukovo-vyrobnyche pidpryiemstvo "Derzhavnyi syformaciinyi heolohichnyi fond Ukrainy".
44. Pivnyak, G.G., & Shashenko, O.M. (2015). Innovations and safety for coal mines in Ukraine. *Naukovyi Visnyk Natsionalnoho Hirnychoho Universytetu*, (6), 118-121.
45. Salieiev, I. (2024). Organization of processes for complex mining and processing of mineral raw materials from coal mines in the context of the concept of sustainable development. *Mining of Mineral Deposits*, *18*(1), 54-66. https://doi.org/10.33271/mining18.01.054
46. Chernokur, V.R., Shkrebko, G.S., & Shelegeda, V.I. (1992). *Dobycha rud s podetazhnym obrusheniem.* Nedra, 271 s.