Resistance of stretched concrete in composite non-centrally compressed reinforced concrete structures

Vladimir Kolchunov[1], *Sergey* Fedorov[1,*], *Sergey* Grechishnikov[2]

[1]Moscow State University of Civil Engineering, 129337, Moscow, 26 Yaloslavskoe shosse, Russia
[2]Southwestern State University, Kursk, ul. 50 let Oktyabrya, 94, 305040, Russian Federation.

Abstract. In relation to composite non-centrally compressed reinforced concrete structures, a computational model and deformation dependences are constructed to assess the resistance of stretched concrete from integral internal forces, taking into account the effect of breaking the continuity of concrete during cracking. The hypothesis of flat sections can be accepted for the middle sections located in the areas between the cracks and experiencing impacts on the left and right, only within one of the rods forming a composite rod. In this case, conditional concentrated shifts, which are called strain gradients, are taken into account in the composite rod at the points of contact joints of adjacent elements. As a result, in a system consisting of concrete blocks and reinforcement, reactions occur in the vicinity of cracks due to the contact of concrete and reinforcement caused by this effect – the deformation effect. The analysis of experimental data has established characteristic diagrams of deformations of reinforcement and concrete in the area between cracks taking into account the influence of this effect.

1 Introduction

In engineering calculations of reinforced concrete structures, the presence of cracks and the resistance of stretched concrete between them is taken into account using a parameter introduced into the theory of reinforced concrete by V.I. Murashev [1]. Murashev's suggestion turned out to be quite successful and is used in many countries of the world up to the present time practically without fundamental changes. However, studies carried out according to the theory of reinforced concrete in the last two decades have established that the model of the averaged stress-strain state of stretched concrete does not take into account significant deformation effects and, above all, effects associated with a violation of the continuity of the two-component material under tension [2,3]. This became especially evident in connection with the introduction into practice of design and construction of structures made of high-strength reinforced concrete and fibro-reinforced concrete. Experimental studies of such structures have established] that the nature of cracking in their stretched zones is qualitatively different from cracking in structures made of conventional concrete [4-6]

* Corresponding author: fedorovss@mgsu.ru

Theoretical studies to refine the deformation model of reinforced concrete have been conducted and are currently being conducted both here and abroad. Among the works of Russian scientists, one can cite, for example, studies [7-10]. Of the foreign works carried out recently in this direction, it is appropriate to note the publications [11,12]. Moreover, according to the authors, the theoretical models they propose combine all the established physical phenomena corresponding to the deformation of elements with normal and inclined cracks: the nagel effect during shear, the deformation effect in the crack, the nature of crack development, etc. in one comprehensive algorithm. At the same time, the authors are apparently not familiar with the fact that over the past decade Russian scientists have built a general physical model of complex resistance of reinforced concrete structures with spatial cracks in a closed analytical form using complex functions [2,3,13]. At the same time, it should be noted that the problem of modern theory and experimental substantiation of physical models of reinforced concrete that most adequately describe the deformation of two component materials, and especially reinforced concrete, is developing extremely slowly both here and abroad. Moreover, the physical model itself, based on the averaging of deformations of stretched concrete and reinforced concrete in its physical essence, has remained virtually unchanged for decades. The introduction into the deformation model of stretched reinforced concrete of the experimentally revealed effect of breaking the continuity of such a two-component material as reinforced concrete [4,6,14,15] allows us to consider the process of its deformation in a new way after the formation of a single crack or a network of cracks in the stretched zone. In the development of this direction, this article presents a physical model of deformation of concrete and reinforcement in a reinforced concrete non-centrally compressed composite element with cracks, taking into account the effect associated with a violation of the continuity of concrete and a conditional concentrated shift in the seam between concretes of composite cross-section and between reinforcement and concrete.

2 Method

The tensile zone of a composite reinforced concrete element under non-centrally compression is divided by cracks into sections of length is l_{crc}, and in sections with cracks, tensile forces are perceived by longitudinal reinforcement. In the middle zone along the length of the element, cracks are located approximately at equal distances. In stage II of the stress-strain state of a reinforced concrete element, the deformations of the compressed and tension zones of the section and the height of the compressed zone along the length of the element are variable, and the neutral axis is wavy.
The hypothesis of flat sections can be accepted for the middle sections located in the areas between the cracks and experiencing impacts on the left and right, only within one of the rods forming a composite rod [9]. In this case, conditional concentrated shifts, which are called strain gradients, are taken into account in the composite rod at the points of contact joints of adjacent elements (рис.1).

In the theory of reinforced concrete, proposed by V.I. Murashev [1], and later used by the overwhelming majority of researchers, the stresses in the section with a crack, expressed in terms of strains, take the well-known form (1):

$$\sigma_s = \varepsilon_s E_s = \frac{\varepsilon_{sm} E_s}{\psi_s} = \varepsilon_{sm} E_{sm}, \quad (1)$$

Where, ψ_s is coefficient taking into account the uneven distribution of deformations of tensile reinforcement between adjacent cracks, equal to the ratio of the average deformations of the reinforcement to the deformations in the section with a crack. However, further studies, and primarily experimental studies, showed that in a number of cases, the noted divergence of forces was so significant that it was not possible to balance them by taking into account the work of tensioned concrete over the crack. Therefore, in studies [4,5,13], attention was paid to the deformation effect, which, as established experimentally, manifests itself in a reinforced concrete element when the concrete is broken. Even the qualitative nature of the measured crack profile in a reinforced concrete element [4,6.13], with a decrease in the opening at the level of the reinforcement axis, confirms the presence of such an effect. The nature of the experimental diagrams of concrete deformations $\varepsilon_{bt}(z)$, obtained with various strain gauges and various schemes for their installation on the edges of cracks, showed that in the zones adjacent to the crack, concrete elongation deformations pass to shortening deformations, and shear adhesion stresses also change sign. The avalanche-like opening of cracks, which can be considered as a concentrated deformation effect along a triangular profile after the physical discontinuity of the material, which is physically characteristic of a concrete element, is restrained in reinforced concrete by reinforcement. As a result, in a system consisting of concrete blocks and reinforcement, in the vicinity of cracks, reactions occur due to the contact of concrete and reinforcement, caused by the specified action, which we called the deformation effect, that is, the effect of concrete discontinuity. The analysis of experimental data makes it possible to identify characteristic experimental diagrams of deformations (stresses) of reinforcement and concrete in the area between cracks (see Fig. 1), taking into account the influence of this effect. The revealed effect certainly affects the main parameter of reinforced concrete ψ_s. The maximum tensile stresses in the reinforcement are slightly shifted from section i with a crack to section j, at some distance from the crack immediately after the appearance of cracks as a result of the effect of concrete discontinuity. As a result, the ratio of the average stresses in the reinforcement σ_{sm} to the stresses in the reinforcement in the crack σ_s, i.e. the parameter ψ_s becomes close to unity, which is confirmed by the experiments of Ya. M. Nemirovskii and recent experiments on reinforced concrete beams reinforced with polymer composites [15,17].

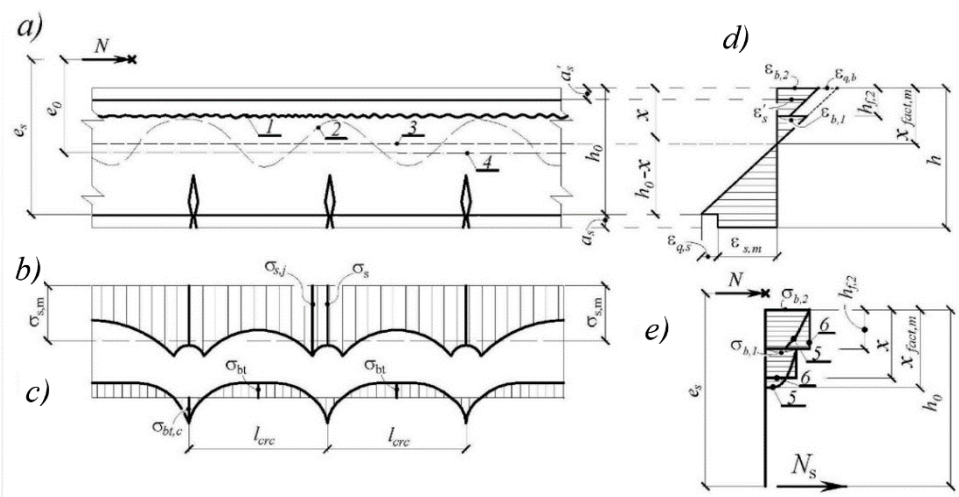

Fig. 1. Typical patterns of deformation in a composite reinforced concrete non-centrally compressed element, taking into account the deformation effect: a - scheme of cracks; b, c - stress diagrams in tensioned reinforcement and tensioned concrete; d –scheme of strain distribution in cross section; e -

scheme of internal forces in a section with a crack: 1 - is seam between concretes; 2, 3, and 4 are the physical, mean, and geometric neutral axes, respectively; 5,6 – are actual diagrams of compressive stresses in the first and second concrete and accepted for calculation, respectively

According to the theory of V. I. Murashev, the coefficient ψ_s after the formation of cracks is minimal. Its value reaches about 0.3. It also affects the consideration of the conditional concentrated shear between reinforcement and concrete. Thus, the discrepancy between the values of ψ_s, determined according to the theory of V.I. Murashev and experimental values, in some cases, can reach two or more times.

Now let's make adjustments to the determining design dependencies, having the corrected diagrams of the distribution of strains and stresses in the cross section and in tension reinforcement and concrete (see Fig. 1).

Unknown parameters x; σ_{b2}; σ_{b1}; σ_s; $\sigma_s^{/}$ are determined from the following equations.

The height of the compressed zone of concrete x is found from the equilibrium equation for the sum of the projections of all forces on the longitudinal axis (Fig. 2):

$$x = \frac{N+\sigma_s \cdot A_s - \sigma_s^{/} \cdot A_s^{/} - b \cdot h_{f,2} \cdot (\sigma_{b2} - \sigma_{b1})}{\sigma_{b1} \cdot b}. \quad (2)$$

The stress in the concrete of the compressed zone is determined from the equation of equilibrium of the moments of all forces acting in the cross section relative to the point *O*.

$$\sigma_{b,2} = \frac{N \cdot e - \sigma_s^{/} \cdot A_s^{/} \cdot \left(h_0 - a_s^{/}\right) - \sigma_{b,1} \cdot b \cdot (x - h_{f,2})[h_0 - h_{f,2} - 0{,}5 \cdot (x - h_{f,2})]}{b \cdot h_{f,2} \cdot (h_0 - 0{,}5 \cdot h_{f,2})}. \quad (3)$$

From the hypothesis of flat sections, adopted for average strains within each element of the composite bar (4), the stresses in tension reinforcement σ_S (5) , lower concrete $\sigma_{b,1}$ (6) and compression reinforcement σ_S' (7) of the composite structure are determined:

$$\frac{\varepsilon_{b,2} + \varepsilon_{q,b}}{\varepsilon_{s,m} + \varepsilon_{q,sm}} = \frac{x_{fact,m}}{h_0 - x_{fact,m}}; \quad \frac{\varepsilon_{b,2} + \varepsilon_{q,b}}{\varepsilon_{b,1}} = \frac{x_{fact,m}}{x_{fact,m} - h_{f,2}}; \quad \frac{\varepsilon_{b,2} + \varepsilon_{q,b}}{\varepsilon_s^{/} + \varepsilon_{q,b}} = \frac{x_{fact,m}}{x_{fact,m} - a_s^{/}}. \quad (4)$$

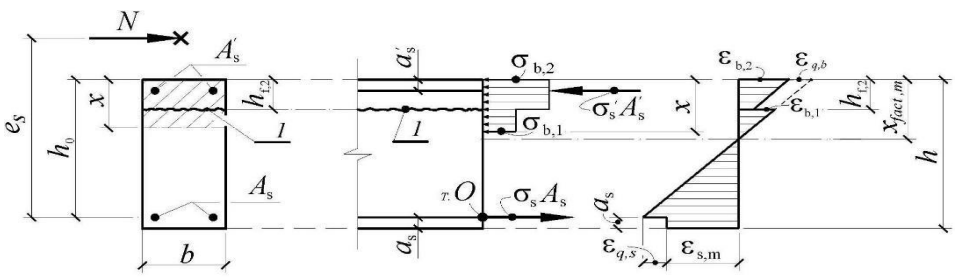

Fig. 2. To the definition of x, σ_S, σ_b in composite eccentrically compressed reinforced concrete structures

$$\sigma_s = \frac{(\sigma_{b,2}+\varepsilon_{q,b}\cdot E_{b,2}\cdot \nu_{b,2})\cdot(h_0-x_{fact,m})\cdot\alpha_{s2}-\varepsilon_{q,s}\cdot\psi_q\cdot E_s\cdot\nu_{b,2}\cdot x_{fact,m}}{\nu_{b,2}\cdot x_{fact,m}\cdot\psi_s} + \sigma_0\psi_s \le R_s; \quad (5)$$

$$\sigma_{b,1} = \left(\sigma_{b,2} + \varepsilon_{q,b}\cdot E_{b,2}\cdot \nu_{b,2}\right)\cdot \alpha_b \cdot \frac{\nu_{b,1}}{\nu_{b,2}}\cdot\left(\frac{x_{fact,m}-h_{f,2}}{x_{fact,m}}\right); \quad (6)$$

$$\sigma_s^{/} = \frac{(\sigma_{b,2}+\varepsilon_{q,b}\cdot E_{b,2}\cdot \nu_{b,2})\cdot\alpha_{s,2}^{/}\cdot\left(x_{fact,m}-a_s^{/}\right)-\varepsilon_{q,b}\cdot E_s^{/}\cdot x_{fact,m}\cdot\nu_{b,2}}{\nu_{b,2}\cdot x_{fact,m}} \le R_{sc}. \quad (7)$$

Substituting the obtained stress values in the reinforcement into expression (3), we obtain dependence (8) for the stresses in the concrete of the compressed zone:

$$\sigma_{b,2} = \frac{k_4\cdot x_{fact}+k_5\cdot(k_6\cdot x_{fact}+k_7)-k_8\cdot(x_{fact}-h_{f,2})(x-h_{f,2})(h_0-0{,}5h_{f,2}-0{,}5x)}{\left[k_1\cdot x_{fact}+k_2\cdot\left(x_{fact}-a_s^{/}\right)+k_3\cdot(x_{fact}-h_{f,2})(x-h_{f,2})(h_0-0{,}5h_{f,2}-0{,}5x)\right]}. \quad (8)$$

Here, $k_1 = \nu_{b,2}\cdot b\cdot h_{f,2}\cdot\left(h_0 - 0{,}5\cdot h_{f,2}\right)$; $k_2 = A_s^{/}\alpha_{s,2}^{/}\left(h_0 - a_s^{/}\right)$; $k_3 = \alpha_b\cdot\nu_{b,1}\cdot b$ $k_4 = N\cdot e\cdot\nu_{b,2}$; $k_5 = A_s^{/}\cdot\varepsilon_{q,b}\cdot\nu_{b,2}\cdot\left(h_0 - a_s^{/}\right)$; $k_6 = E_s^{/} - \alpha_{s,2}^{/}\cdot E_{b,2}$; $k_7 = \alpha_{s,2}^{/}a_s^{/}\cdot E_{b,2}$; $k_8 = \alpha_b\cdot\nu_{b,1}\cdot b\cdot\varepsilon_{q,b}\cdot E_{b,2}\cdot\nu_{b,2}$.

Result

Let us analyze the influence of the considered effect of concrete discontinuity on the calculated dependences of internal forces in composite non-centrally compressed reinforced concrete structures built taking into account the effect of concrete discontinuity in the tension zone. The analysis will be performed in the following sequence.

At the first step, we take $x_{fact,m} = 0{,}5h_0$ and, using formula (7), we find $\sigma_{b,2}$. Then, using formula (4), σ_s is determined, taking into account the corresponding restriction. After that, according to the formula (5), we find the stresses $\sigma_{b,1}$, and according to the formula (6), the stresses $\sigma_s^{/}$, taking into account the corresponding restriction. As a result, we have all the parameters for determining the height of the compressed zone x using formula (2). Comparing the given and calculated value of x, taking into account these comparisons, we proceed to the next step of iterations and so on until the required accuracy of calculations.

From the characteristic diagrams constructed taking into account the considered effect of concrete discontinuity (Fig. 3), it follows that:

$$\psi_s = \frac{1}{\sigma_S l_{crc}}\cdot\left[\left(\sigma_{S,j}(1-\omega_1) + \omega_1(\sigma_S - \sigma_{S2})\right)\cdot(l_{crc} - 2t_*) + \left(\sigma_{S,j} + \sigma_S\right)t_*\right]. \quad (9)$$

Here, the stresses $\sigma_{S,j}$are determined from the dependencies of fracture mechanics obtained for reinforced concrete [6]. t_* in the first approximation (taking into account the Saint-Venant principle) is taken equal to $1{,}5d$, where d is the diameter of the working tensile reinforcement.

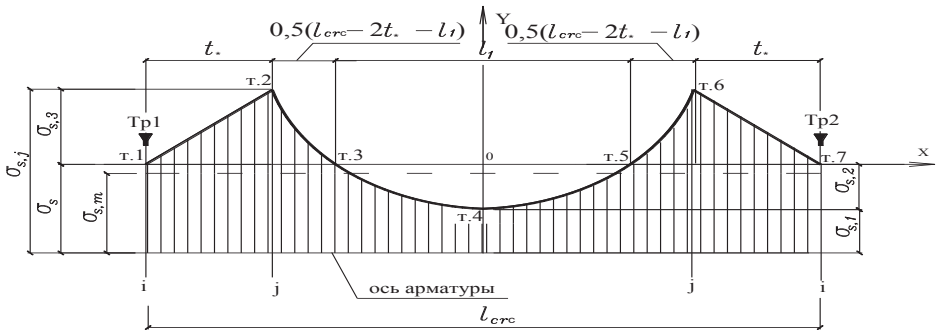

Fig. 3. Characteristic experimental diagrams of reinforcement stresses between transverse cracks at the level of the tensile reinforcement axis: ▼ is the symbol for the location of the crack

In the diagram shown in Fig. 3, the distance l_1 is found from the condition, according to which, the change in stresses in tension reinforcement between points 2–4 is most successfully described by the hyperbolic dependence (10)

$$y = A \cdot e^{-\lambda \cdot x} - B, \tag{10}$$

where $$A = \frac{\sigma_{s,j} - \sigma_s + \sigma_{s,2}}{\left(e^{0,5 \cdot \lambda (l_{crc} - 2t)} - 1\right)}; \qquad B = A + \sigma_{s,2} \ . \tag{11}$$

Then, for l_1 we get: $$l_1 = \frac{2}{\lambda} ln\, ln\, \frac{B}{A} \ . \tag{12}$$

Equating the tensile forces in the section with a crack and in the middle of the distance between the cracks, we can write:

$$\sigma_S A_S = \sigma_{S1} A_S + \sigma_{bt} A_{bt}. \tag{13}$$

From here $$\sigma_{S2} = \sigma_{bt} \cdot \frac{A_{bt}}{A_S} = \frac{\chi R_{bt}}{\mu}\left(1 - \frac{A_b}{A}\right). \tag{14}$$

After substituting (14) into (8) and corresponding transformations for the main parameter of reinforced concrete ψ_S we get:

$$\psi_S = \frac{(1+\varphi_T+\varphi_Q)}{3\sigma_S l_{crc}} \cdot \left[\left(\sigma_{S,j} + 2\sigma_S - \frac{2\chi R_{bt}}{\mu}\left(1 - \frac{A_b}{A}\right)\right)(l_{crc} - 2t_*) + 3\left(\sigma_{S,j} + \sigma_S\right)t_*\right]. \tag{15}$$

Here φ_T (x,y,z) and φ_Q (x,y,z) are functions of torsion and transverse force[3,17,18]; ω_1 for practical calculations can be taken equal to $2/3$.

3 Discussion

It is not difficult to see the main reason for the discrepancy between external and internal forces in the cross section of a reinforced concrete element, calculated according to the theory

of V. I. Murashev from the calculated dependences obtained taking into account the effect of concrete discontinuity.

For a quantitative analysis of the main parameter of reinforced concrete ψ_S, we will establish the analytical dependence of this parameter on the integral internal forces in the calculated section. The ratio $\frac{\sigma_{S2}}{\sigma_S}$can be written in terms of the corresponding internal moments, namely the moment between cracks perceived by the concrete of the tension zone M_b (from the equality of tensile forces in the section with a crack and in the section between cracks). Here we use the fact that the difference in the forces in the reinforcement in the section with a crack $\sigma_S A_S$ and between the cracks $\sigma_{S,k} A_S$, equal to $\sigma_{S,2} A_S$, is balanced by the resultant of the forces arising in the tensioned concrete $\sigma_{bt} A_{bt}$ (Fig. 4), As for the point of application of this resultant $\sigma_{S,2} A_S$, then certainly it corresponds to the point of application of the resultant in tensile concrete, i.e. z_{bt}.

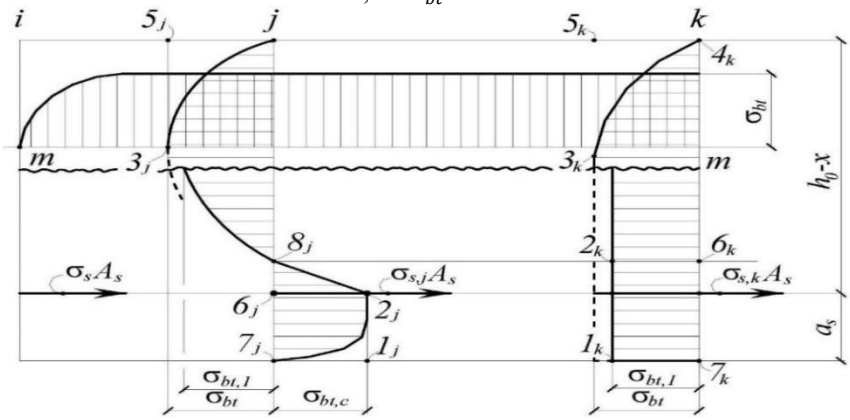

Fig. 4. To the analysis of stress distribution in the tension zone of a reinforced concrete element

The moment M_b at stresses σ_{bt} can be expressed in terms of the moment $M_{b,crc}$ perceived by the concrete section at stresses R_{bt} as:

$$M_b = \frac{\sigma_{bt}}{R_{bt}} \cdot M_{b,crc} = \chi M_{b,crc} \ , \tag{16}$$

where

$$\chi = \frac{\sigma_{bt}}{R_{bt}} \approx \frac{\sigma_{bt,1}}{R_{bt,1}} \tag{17}$$

As a result, the desired ratio is determined from expression (19):

$$\frac{\sigma_{S2}}{\sigma_S} = \frac{M_b}{M(1-\phi_1)} = \chi \frac{M_{b,crc}}{M(1-\phi_1)}.$$

(18)

The ratio $\frac{\sigma_{S3}}{\sigma_S}$ is defined in the same way.

The diagram of stresses in tensile concrete between cracks is shown in section k (see Fig. 4). Since the tensile concrete fibers work taking into account plastic deformations, the stresses along the height of the tensile zone are distributed approximately uniformly and are equal to σ_{bt} (or $\sigma_{bt,1}$ in the case of $x_{fact,m} < h_{f,2}$. Such a distribution is typical not only for section k, but also remains for almost all sections located between cracks at some distance from the cracks themselves and the zone near the reinforcement, where local conditions are

superimposed. Thus, in the longitudinal section *m – m*, the stresses in the tensile zone of concrete after the formation of cracks remain approximately at the same level σ_{bt}, not counting the local areas adjacent to the cracks.

Using the formulas for the ratios $\frac{\sigma_{S3}}{\sigma_S}$ and $\frac{\sigma_{S2}}{\sigma_S}$, after algebraic transformations, the analytical dependence of the parameter ψ_S in the calculated section on the integral internal forces is obtained:

$$\psi_S = \frac{(1+\zeta_T+\zeta_Q)}{3l_{crc}} \cdot \left[\left(\frac{M_{b,j}}{M\gamma} - \frac{2\chi M_{b,crc}}{M(1-\phi_1)} + 3\right)(l_{crc} - 2t_*) + 3\left(\frac{M_{b,j}}{M\gamma} + 2\right)t_*\right]. \quad (19),$$

Here: ζ_T (x,y,z) and ζ_Q (x,y,z) are functions of torsion and shear force[16,18].

In this formula:

$$M = N(c + \zeta_2 x_2), \quad (20)$$

$$M_{b,crc} = \frac{R_{bt}k}{\mu}\left(1 - \frac{A_b}{A}\right) \cdot A_s \cdot [h_0 - \zeta_1 x_1 - 0{,}5(h_0 - x_1)], \quad (21)$$

$$M_{b,j} = \left[\chi_1 R_b \left(\frac{1}{2}\frac{A_{1bt,c}}{A_S} + \frac{2}{3}\frac{A_{2bt,c}}{A_S}\right) - \frac{2}{3}\frac{\chi R_{bt}k}{\mu}\left(1 - \frac{A_b}{A} - \frac{A_{bt,c}}{A}\right)\right] \times$$

$$\times A_s \cdot \left(B_t \cdot t_t - B_{1,c} \cdot t_{1,c} - B_{2,c} \cdot t_{2,c}\right). \quad (22)$$

The calculations carried out using formula (19) and the constructed graph of the change in the parameter ψ_S depending on the level of loading M/M_{crc} (Fig. 6), in comparison with the numerical values of this parameter calculated in [16] according to the theory of V. I. and the results of experimental data showed that taking into account the effect of discontinuity, in some cases, makes it possible to very significantly refine the calculated value of the main parameter of the theory of reinforced concrete.

It should be noted that the discrepancy in area *B* and in area *C*, C_1 at the steps preceding the destruction of the reinforced concrete element from the yield of reinforcement can also be very significant, exceeding two or more times.

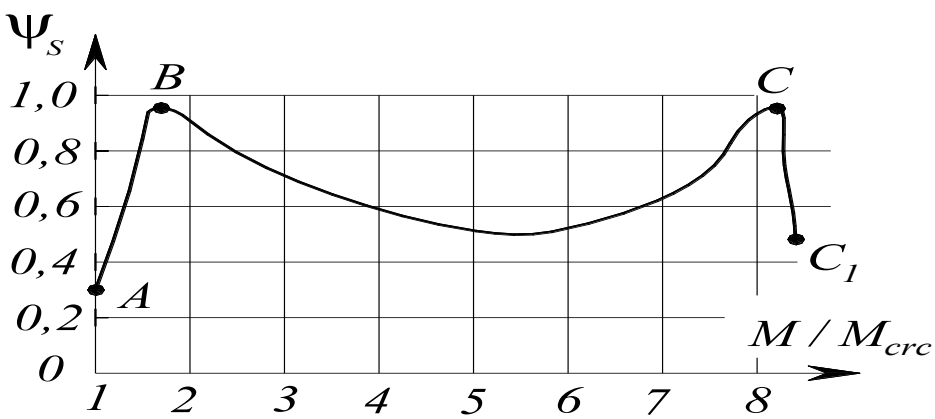

Fig. 6. Graph of the change in the parameter ψ_s from the loading level M/M_{crc}, taking into account the effect of concrete discontinuity

Before the formation of cracks, the value of ψ_s, according to the calculations of V.M. Bondarenko [17,18] is equal to ψ_{crc}. After the appearance of cracks as a result of the effect of concrete discontinuity, a sharp change in the value of ψ_s occurs, that is, a jump from a value of ψ_{crc} equal to about 0.3 to a value approaching unity. This jump is not on the graph obtained according to the theory of V. I. Murashev and in a number of regulatory documents (see Fig. 6, region AB).

4 Conclusions

1. Dependences for estimating the resistance of tensile concrete from integral internal forces are obtained for composite eccentrically compressed reinforced concrete structures, taking into account the effect of concrete discontinuity during crack formation.

2. An improved analytical dependence of the main parameter of the theory of reinforced concrete ψ_s on integral internal forces has been obtained, which makes it possible to explain many phenomena observed in experiments that occur when reinforced concrete resists force and deformation effects.

References

1. V.I. Murashev, Crack resistance, rigidity and strength of reinforced concrete. (M.: Mashstrojizdat, 1950).
2. V.I. Kolchunov, Building and Reconstruction, **4**, 15 (2022).
3. V.I. Kolchunov and A.I. Dem'yanov, Magazine of Civil Engineering. **81**, 160 (2018).
4. V.I. Travush, N.I. Karpenko, Vl.I. Kolchunov, S.S. Kaprielov, A.I. Dem'yanov, S.A. Bulkin and V.S. Moskovtseva, Structural Mechanics of Engineering Constructions and Buildings. **16**, 290 (2020).
5. A.I. Dem'yanov, Building and Reconstruction, **5**, 3 (2019).
6. Vl.I. Kolchunov, H.Z. Bashirov, I. A. YAkovenko and G. K. Bidzhosyan, Building and Reconstruction, **6,** 3 (2011).
7. H.Z. Bashirov, V.I. Kolchunov, V.S. Fedorov and I.A. YAkovenko, Reinforced concrete composite structures of buildings and structures. (M.: ACB, 2017).
8. S.A. Bulkin, Building and Reconstruction, **3**, 4 (2022).
9. V.V. Adishchev, V.V. Mal'cev and V.I. SHul'ga, News of Higher Educational Institutions. Construction, **3,** 95 (2018).
10. O.V. Radajkin, Building and Reconstruction. **6,** 26 (2020).
11. G. Kaklauskas, A. Sokolov and K. Sakalauskas, Engineering Structures, **281,** 115770 (2023).
12. M. Classen, Engineering Structures, **210,** 110207 (2020).
13. V.I. Kolchunov, I.A. YAkovenko and YA.V. Lymar', Building and Reconstruction, **5**, 17 (2015).
14. N.I. Karpenko, Vl.I. Kolchunov, V.I. Kolchunov, V.I. Travush and A.I. Dem'yanov, Stroitel'nye materialy, **6,** 47 (2021).
15. V.V. Adishchev and V.V. Maltsev, IOP Conference Series: Materials Science and Engineering, **456,** 012098 (2018).
17. V.A. Slepec, Vestnik TGASU **5,** 110 (2016)
17. V.M. Bondarenko and S.V. Bondarenko, Engineering methods of nonlinear theory of reinforced concrete (M.: Strojizdat, 1982).

18. Vl.I. Kolchunov, M.V. Protchenko, V.N. SHan'kov and S.V. Grechishnikov, Industrial and civil engineering **1,** 60 (2023).