Development of physical and mathematical models of the duker to calculate the critical length of its sections between supports on the riverbed

Vladimir Orlov [1], *Dmitry* Podolyan[1,*]

[1]Moscow State University of Civil Engineering, 26, Yaroslavskoye shosse, Moscow, 129337, Russia

Abstract. The issues related to the construction and diagnosis of ducker crossings, signs of their operable condition are considered, with an emphasis on the development of a mathematical model for determining the critical length of the underwater pipeline spans between its supports in an unstable riverbed. A water-filled steel ducker of a certain diameter and wall thickness is subject to consideration for calculating the critical length, where a set of initial data necessary for design and construction is determined on the basis of initial technical, hydraulic and strength parameters. The results of the automated calculation are presented, which reflect the values of the following parameters: drag forces, Reynolds numbers, Froude criteria, pipeline weight, pushing and stretching forces, longitudinal stresses in the pipe wall from internal pressure and tensile force. On the basis of the obtained printouts of the results of the automated calculation, an analysis of the possible change in the value of the critical length of the ducker transition between the supports in the case of correction or clarification of some parameters regarding changes in the flow rates of water in the river and the permissible value of the deflection boom of the pipeline between the supports was carried out.

Keywords: duker, construction technologies, condition diagnostics, mathematical model, critical length

Introduction

Performing work on the installation of a ducker in water bodies in an open manner on a riverbed is a complex of construction measures, including blocking the movement of water with a tongue or earth embankment, and with a large width or the impossibility of completely blocking the movement of water in the river, as a rule, using rope scraper installations, hydraulic monitors or dredgers. At the same time, one of the priority tasks when installing a ducker above the bottom of a watercourse with an unstable channel is the installation of supports supporting the ducker.

To immerse the pipeline thread to the bottom of the reservoir, the following technologies can be used [1-3]: dragging along the bottom, free immersion from floating supports; sequential build-up of pipe modules on the seabed or river bottom.

In order to prevent the pipeline from surfacing on the surface of the watercourse, it is necessary to perform ballasting operations with semi-rings of reinforced concrete, weighting

* Corresponding author: dim.p-2010@yandex.ru

saddle-shaped or annular single loads and anchor devices [4-7]. After completion of work on the installation of the duckline, it is necessary to fill the structure with soil when using a barge or hydraulic monitors.

In conditions of unstable hydraulic regime of the reservoir, unsteady and prone to erosion of the soils forming the channel, in order to ensure effective and long-term operation of the ducker junction, the installation of supports under the pipeline with a certain distance relative to each other is not excluded [8-9]. This explains the need to solve this urgent problem of determining the critical lengths between the duker supports.

With prolonged operation of the duker, it is possible to change its technical condition, which can be classified as: serviceable; operable; marginal (inoperable).

With regard to the state of the channel under the ducker crossings, signs of serviceable condition include: the location of the ducker along the bottom of the water body in the ground, respectively, design and regulatory and technical documentation; the stable condition of the bottom of the water body, the presence of fortified banks; the absence of defects in the walls of the pipeline, welded joints and supports.

Signs of a working condition include: minor deformations of the pipeline body (dents, corrugations); the presence of minor defects and damage to the ducker that do not exceed permissible values and do not affect the process of transporting water; a minor violation of shore protection; the presence of not exceeding the minimum permissible residual wall thickness of the pipeline, etc.

In the extreme (inoperable) condition of the duker, its further operation is unacceptable without carrying out repair and restoration work, or is impractical due to the complexity (high cost) of restoration.

As evidenced by the practice of construction and operation of duckers, when it comes to critical lengths between the supports of a steel underwater passage, in this case a number of factors are subject to consideration, which primarily include such as pipe diameters, as well as their wall thicknesses, determined using various technical diagnostic tools [10-12].

Modern methods of instrumental inspection of the ducker, including in-line diagnostics of pipelines using non-destructive testing methods (without violating their integrity) include, for example, magnetometric methods, flaw scanners that detect the type of defects on steel pipelines and record changes in their parameters over time, as well as other complexes that work taking into account the stage of degradation in various geographical zones and seasons of work [13-20].

When examining exposed or sagging areas, diving television systems or cameras installed on board remote-controlled underwater vehicles are used to provide underwater video shooting [21].

In the material below, an integrated approach to determining the critical lengths between the supports of the ducker junction is considered, where a significant number of factors influencing the choice of the desired distance between the supports ensuring reliable operation of the ducker in an unstable channel are analyzed.

Materials and methods

The research materials are underwater pressure pipelines (duckers) installed at the bottom of the watercourse on supports, and the method is the development of physical and mathematical models of the ducker operation and calculation of the critical length L_{cr} of sections of the sagging part of a round steel ducker filled with water in the profile, which has a certain diameter and wall thickness, with appropriate horizons of high and intertidal waters above the arch of the pipe in the place of possible erosion of the bottom in the riverbed (Fig. 1).

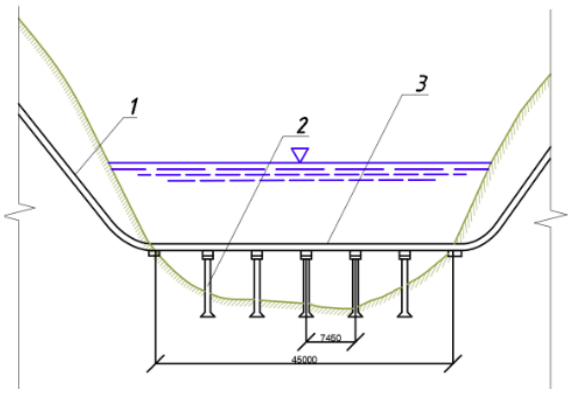

Fig. 1 Sample of the location of the ducker above the river bottom with supports 1- ducker; 2- ducker support; 3- span of honey with ducker supports

The ultimate goal of the research presented below is to calculate the critical length of the ducker between the supports based on the analysis of the technical, hydraulic and strength characteristics of the object under consideration.

Research results and their interpretation

The following basic parameters of the duker operation are considered as initial information for the development of physical and mathematical models: the value of the water velocity in the bottom layer; unstable soils in the channel with its possible erosion; the location of the pipeline at a certain height from the bottom of the channel, which exceeds the diameter of the ducker; insignificant wave formation (the wavelength is small compared to the specified depths of the watercourse); the use of anticorrosive waterproofing of the pipeline, for example, normal bitumen according to SNiP II-45-75 «Main pipelines» with a certain thickness of a layer of bitumen-rubber mastic and a protective wrapper made of fiberglass according to GOST 15836-79 Bitumen-rubber insulating mastic.

The essence and sequence of the problem to be solved are described below.

When liquid flows around underwater pipelines, they experience a force effect: drag and lift. At the same time, in conditions of insignificant wave formation on the river, the wave effect on the pipeline is not taken into account, and with a relatively large location of the ducker relative to the bottom of the river, the lifting force is not taken into account.

Thus, for the given conditions of the location of the ducker, the drag P acting per unit length of the pipeline is determined by the formula:

$$P = C_x \cdot v^2 \cdot \rho \cdot D_{ht} / 2,$$

where C_x - the drag coefficient (determined depending on the Reynolds number according to the graphs in Figure 2); ρ - the density of river water; v - the velocity of the river flow; D_{ht} - the outer diameter of the pipeline.

The Reynolds number Re for the flow of water flowing into the pipeline is determined by the formula:

$$Re = v \cdot D_{ht} / \upsilon$$

where υ - the kinematic viscosity of the water in the river depending on the temperature of the water in the watercourse t

Having the calculated values of the Reynolds number, the value of the drag coefficient C_x is determined from the graph in Figure 2 using the corresponding curves (for example, under number 13).

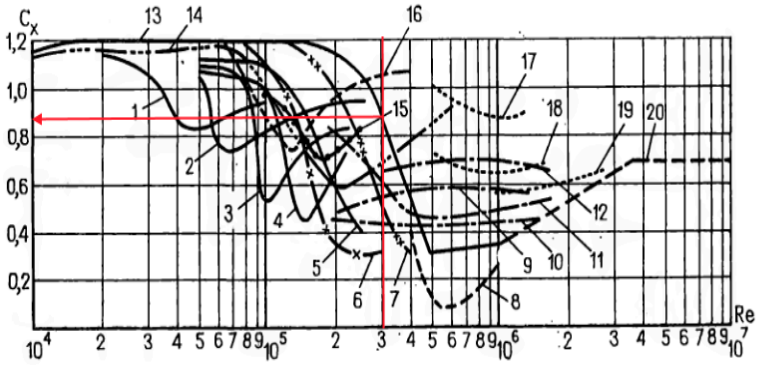

Fig. 2 Curves of dependence of the coefficient C_x on the Reynolds number (curve 13 based on Borodavkin and Shadrin's experiments for a concreted cylinder)

In order to take into account the influence of the free surface of water in the river, the coefficient C_x should be multiplied by the coefficient K_1, which takes into account the ratio of the horizon of high waters to the outer diameter of the ducker, i.e. $K_1=h_1/D_{ht}$, and the coefficient K_2, which takes into account the ratio of the horizon of intertidal waters to the outer diameter of the ducker, i.e. $K_2=h_2/D_{ht}$.

If the calculated value of $K_1>4$, then the correction of K1 is not entered.

After that, the values of the Froude criterion Fr are evaluated:

- for high water:

$$Fr_1=v^2/(gH_1)$$

- for the autumn:

$$Fr_2=v^2/(gH_2),$$

where g - the acceleration of gravity; H_1 and H_2 - respectively, the distances to the bottom of the reservoir at high water and at low water.

In the case of obtaining the calculated value of the Froude numbers $Fr<1$, the coefficient K_2 is not entered.

The next step of the algorithm is to determine the stability of the pipeline. Earlier it was noted that the pipeline is located at a certain height from the bottom of the riverbed, which exceeds the diameter of the ducker.

The calculation of the lifting force is performed according to the formula:

$$s/D_{ht},$$

where s - the distance from the bottom of the pipeline to the bottom of the river

If the lifting force exceeds 1, it is not subject to subsequent accounting.

The buoyant (Archimedean) force is calculated in case the pipeline is installed in place until it is filled. Excessive force (when the pipeline is full) leads to an increase in the stability of the pipeline.

Stability is understood as a condition of the pipeline in which it will be at rest in a predetermined position with the most unfavorable combination of loads seeking to remove the pipeline from this position.

To determine the stability of the pipeline, a number of preliminary calculation operations are carried out to identify the weight (mass):

-one meter of pipeline Q:

$$Q= m_{tr}\cdot g$$

- water in one meter of pipeline Q_b:

$$Q_b=\rho\cdot g\cdot\pi\cdot(D_h-2\cdot l)^2/4$$

- insulation on the pipeline Q_{is}:

$$Q_{is} = \rho_{is} \cdot g \cdot \pi \cdot (D_{ht}^2 - D_h^2)/4$$

- the pipeline as a whole, taking into account the insulation and the water filling the pipe Q_{tr}:

$$Q_{tr} = Q + Q_b + Q_{is},$$

where m_{tr} - the mass of one meter of pipe; D_h - the diameter of the ducker (external without waterproofing), ρ_{is} - the density of the insulation material

The pushing (Archimedean) force A is determined by the formula:

$$A = \rho \cdot g \cdot \pi \cdot (D_{ht})^2/4$$

The ring stresses δ_{kc} in the pipe wall from the internal pressure are calculated using the formula:

$$\delta_{kc} = K \cdot P_{bn} \cdot D_{bn}/(2 \cdot l)$$

The longitudinal stresses δ_{pr} in the pipe wall from the internal pressure are determined by the formula:

$$\delta_{pr} = ɱ \cdot \delta_{kc}$$

The longitudinal tensile force H_{pr} is calculated using the formula:

$$H_{pr} = 10^6 \cdot \delta_{pr} \cdot \pi \cdot D_h \cdot a$$

Weighing force q_h:

$$q_h = Q_{tr} - K \cdot P - A$$

Stiffness coefficient K_j of the pipeline section:

$$K_j = E \cdot (\pi \cdot D_{ht}^4/64) \cdot [1 - (D_{bn} / D_{ht})^4],$$

where l - the wall thickness of the pipeline; P_{bn} - the internal pressure in the pipeline, D_{bn} - the inner diameter of the ducker, K - the internal pressure overload coefficient, ɱ - the transverse deformation coefficient (Poisson's ratio) for steel, a - the thickness of anticorrosive bitumen insulation, E - the rigidity of the steel from which the pipe is made.

The critical span length L_{kr} between the supports is determined by the results of solving the transcendental biquadrate equation:

$$q_h = (40 H_{pr} \cdot L_{kr}^2 + 384 \cdot K_j) \cdot f / (5 \cdot L_{kr}^4),$$

where f - the magnitude of the deflection boom of the ducker section (permissible deflection when bending the pipe profile)

The mathematical model of the ducker operation presented above was the basis for the development of an automated program for calculating the critical span length of the sections of the ducker between the supports.

The initial information for the task under consideration is presented in Table 1.

Table 1. The name and values of the parameters entered into the automated program

The name of the parameters and their dimension	The values of the parameters
Diameter of the ducker (external without waterproofing) D_h (*m*)	0.8
Pipeline wall thickness l (m)	0.011
The pipeline is made of st3sp steel with rigidity E (*MPa*)	200000
Internal pressure in the pipeline P_{bn} (*MPa*)	1.177
Internal pressure overload factor K	1.15
Coefficient of transverse deformation (Poisson's ratio) for steel ɱ	0.3
The magnitude of the deflection boom f	0.03
The horizon of high waters h_1 (*m*)	10
The horizon of intertidal waters h_2 (*m*)	6
The velocity of water in the bottom layer v (*m/s*)	0.5
The distance of the pipeline from the bottom of the river s (*m*)	1.25
Anti-corrosion protection (bituminous) a (*m*)	0.008
Insulation material density ρ_{is} (kg/m^3)	1250

Water temperature in the river t (^0C)	10
Kinematic viscosity of water in a river depending on temperature υ ($м^2/с$)	$1.306 \cdot 10^{-6}$
Drag coefficient C_x	0.9
Density of river water ρ (kg/m^3)	1000
The weight of one meter of pipe m_{tr} (kg/m)	160.2

The results of the automated calculation are presented in Table 2.

Table 2. Name and values of the calculated parameters

The name of the parameters and their dimension	The values of the parameters
Diameter of the duker with waterproofing D_{ht} (m)	0.816
The inner diameter of the ducker D_{bn} (m)	0.778
Drag force P (N/m)	91.8
Reynolds number for the flow of water flowing into the pipeline Re	312404.29
The ratio for high water h_1 / D_{ht}	12.25
The ratio for intertidal waters h_2 / D_{ht}	7.35
The distance to the bottom of the reservoir at high water H_1 (м)	12.07
The distance to the bottom of the reservoir at the boundary H_2 (м)	8.07
Froude's criterion for high water Fr_1	0.002112
Froude's criterion for the boundary Fr_2	0.003159
Ratio s/D_{ht}	1.532
The weight of one meter of pipeline Q (N/m)	1571.56
The weight of water in one meter of pipeline Q_h (N/m)	4661.201
Weight of insulation on the pipeline Q_{is} (N/m)	248.89
The weight of the pipe, taking into account the insulation and the water filling the pipe Q_{tr} (N/m)	6481.65
The pushing (Archimedean) force A (N/m)	5127.66
Annular stresses in the pipe wall from internal pressure δ_{kc} (MPa)	47.87
Longitudinal stresses in the pipe wall from internal pressure δ_{pr} (MPa)	14.36
Longitudinal tensile force H_{pr} (N)	288577.25
Weighing force q_h (N/m)	1248.43
The coefficient of rigidity of the pipeline section K_i	755.52
Critical span length between supports L_{kr} (m)	7.45

Analyzing the data in Table 2, it should be noted that the critical span length between the supports is 7.45 *m*.

If, for example, the total length of the ducker within the riverbed is 45 *m*, and the distance between the supports (in the amount of at least 6 spans) should not exceed 7.45 *m*, then it will be necessary to erect 5 supports without taking into account the attachment (pinching) of the ducker on both banks (see Figure 1).

With alternative options for changing the flow velocity of water in a watercourse, for example, 0.1 and 0.9 *m/s*, the critical lengths will be 7.17 and 8.27 *m*, respectively. Similar changes in the critical length between the supports can be traced with a different magnitude of the deflection boom.

If, with an arrow value of $f = 0.03$, the critical span length was $L_{kr} = 7.45$ *m*, then with a greater permissible curvature of $f = 0.05$, it will be $L_{kr} = 9.62$ *m*.

Thus, it can be stated that the critical length between the supports depends on a number of hydraulic parameters of the river flow and the assigned technical limitations.

Conclusions

1. Based on the creation of a physical model of the work of the ducker, analytical studies were carried out to develop a mathematical model of its operation when the pipeline is located above the bottom of a watercourse.

2. A general solution algorithm for determining the critical lengths of sections (spans) of the ducker between the supports is presented.

3. An automated calculation of the operation of the underwater ducker was performed with the determination of basic technical, hydraulic and strength parameters, the critical length between the supports and their number, which can be used by designers in solving such problems.

4. The analysis of the influence of some parameters on the change in the value of the critical span length of the ducker junction between the supports is carried out.

References

1. Bhadran V., Shukla A., Karki H. Non-contact flaw detection and condition monitoring of subsurface metallic pipelines using magnetometric method. Materials Today: Proceedings. 2020; 28:860-864. DOI: 10.1016/j.matpr.2019.12.313.

2. Mogutin Yu.B., Guseva O.A., Veselova A.V., Vlasyev M.V. Organization of underwater maintenance work at offshore oil and gas fields // Shipbuilding. 2017. No. 4 (833). pp. 27-33. (rus)

3. Gaidukevich S.V., Nikonenko A.D., Shalagin V.N. Maintenance of river and sea crossings of Gazprom pipelines. Status analysis and development proposals // The territory of NEFTEGAZ. 2013. No. 11. pp. 86-91. (rus)

4. Surojo E., Syah Putri E.D., Budiana E.P. Recent Developments on Underwater Welding of Metallic Material // Procedia Structural Integrity. 2020. Vol. 27. Pp. 14–21. DOI: 10.1016/j.prostr.2020.07.003.

5. Atroschenko A.A., Zhukov G.D., Zhukov I.G. Diagnostics and protection of underwater crossings of main pipelines from erosion. *The territory of NEFTEGAZ*. 2013; 11:94-95. (rus)

6. 6. Ryltseva Yu.A. Modern methods and means of diagnostics and repair of underwater pipeline crossings // Vestnik MGSU. 2021. Vol. 16. Issue 9. pp. 1236-1263. DOI: 10.22227/1997-0935.2021.9.1236-1263.

7. Bai Yo., Bai Q. Subsea Engineering Handbook. Second Edition. United Kingdom: Gulf Professional Publishing, 2020. 940 p. DOI: 10.1016/B978-0-12-812622-6.00021-X

8. Yang Q., Sun M., He M., Yang Q. Evolution features of riverbeds near underwater crossing line pipes: An experimental study // Natural Gas Industry B. 2020. Vol. 7. Pp. 246–253. DOI: 10.1016/j.ngib.2019.10.006

9. Davis P., Brockhurst J. Subsea pipeline infrastructure monitoring: A framework for technology review and selection // Ocean Engineering. 2015. Vol. 104. Pp. 540–548. DOI: 10.1016/j.oceaneng.2015.04.025

10. Bao Ch., Hao H., Lia Z. X. Integrated ARMA model method for damage detection of subsea pipeline system // Engineering Structures. 2013. Vol. 48. Pp. 176–192. DOI: 10.1016/j.oceaneng.2015.04.025

11. Ivliev E.A. Detection, tracking and inspection of underwater pipelines and cables by electromagnetic methods. Underwater research and robotics. 2009. No. 2 (8). pp. 22-33. (rus)

12. Grokhopolsky D.L., Vakulin N.A., Imanov O.A. A robotic platform for in-line diagnostics. Patent RU 194 854 U1. Published on 12.25.2019. Bulletin 36(rus)

13. Zvirko O., Tsyrulnyk O., Nykyforchyn H. Non-destructive evaluation of operated pipeline steel state taking into account degradation stage // Procedia Structural Integrity 2020. Vol. 26. Pp. 219–224. DOI: 10.1016/j.prostr.2020.06.025

14. Surojo E., Syah Putri E.D., Budiana E.P. Recent Developments on Underwater Welding of Metallic Material. Procedia Structural Integrity. 2020; 27:14-21. DOI: 10.1016/j.prostr.2020.07.003

15. Mahmutoglu Y., Turk K. Positioning of leakages in underwater natural gas pipelines for time-varying multipath environment // Ocean Engineering. 2020. Vol. 207. P. 107454. DOI: 10.1016/j.oceaneng.2020.107454

16. Li X., Chen G., Chang Yu., Xu C. Risk-based operation safety analysis during maintenance activities of subsea pipelines // Process Safety and Environmental Protection. 2019. Vol. 122. Pp. 247–262. DOI: 10.1016/j. psep.2018.12.006

17. Wang P., Chi C., Jiyuan L., Huang H. Improving performance of three-dimensional imaging sonars through deconvolution // Applied Acoustics. 2021. Vol. 175. P. 107812. DOI: 10.1016/j.apacoust. 2020.107812

18. Merkulov V.I. Main directions and prospects for the development of underwater robotic systems used in the Arctic zone of the Russian Federation // Integrated Arctic research: collection of scientific papers of the International Symposium. St. Petersburg, 2017. pp. 16-28. (rus)

19. Katysheva M.V. Electromagnetic inspection of underwater pipelines and cables by an underwater vehicle // The intellectual potential of the XXI century: the stages of knowledge. 2014. No. 25. pp. 125-129. (rus)

20. Atroschenko A.A., Zhukov G.D., Zhukov I.G. Diagnostics and protection of underwater crossings of main pipelines from erosion // The territory of NEFTEGAZ. 2013. No. 11. pp. 94-95. (rus)

21. Pozynich K.P., Eunap R.A., Pozynich E.K. Mechanization of repair and maintenance work on underwater crossings of pipelines secured with weights // Innovative development: the potential of science and modern education: monograph. Penza: Science and Education, 2019. pp. 165-188. (rus)