Architectural and planning solutions for multi-storey residential buildings with safety capsules

Maryna Bordun[1*], *Mykola* Bevz[2], *Svitlana* Shekhorkina[1], *Hryhorii* Nevgomonnyi[3], and *Yuriy* Krutiy[1]

[1]Ukrainian State University of Science and Technologies, Reinforced Concrete and Masonry Structures Dept., 49010, Dnipro, Ukraine
[2]Lviv Polytechnic National University, Architecture and Conservation Dept., 79013, Lviv, Ukraine
[3]Ukrainian State University of Science and Technologies, Architectural Design and Urban Planning Dept., 49010, Dnipro, Ukraine

Abstract. The purpose of this study is to develop an architectural and construction solution for protecting the civilian population in a multi-story residential building by creating a safe space with instant accessibility. The paper analyzes the past and present experience of designing and constructing civil defense facilities. An architectural and structural solution of the "safety capsule" − a form of protection of the civilian population of instant accessibility in multi-storey residential buildings has been developed based on the best practices. The safety capsule is a dual-purpose protective structure of instant accessibility, that can be used as a shelter during emergencies and as an auxiliary room in peacetime by the residents of the house. The options for detailed planning of the internal space of the "safety capsule" were designed. The proposed solution is integrated into the architectural and planning structure of multi-storey residential buildings by the example of 12-storey and 16-storey residential buildings.

1 Introduction

Since the beginning of the full-scale invasion, the Russian Federation has been waging a terrorist war against the civilian population of Ukraine. The Russian army is constantly shelling Ukrainian cities and towns, destroying infrastructure. The significant number of human losses, destroyed and damaged buildings, enterprises, electricity and heat supply networks are the result of this war. A lot of people are injured from missiles fragments and other types of ammunition during shelling or are buried alive under the rubble of destroyed buildings.

Therefore, today the protection and safety of population are as important course for Ukrainian State as the defensive-offensive operations aimed at liberating the Ukrainian territories from aggressor.

The military aggression of the Russian Federation against Ukraine has proved the critical necessity of implementing new principles in the planning and design of residential, public and industrial buildings. Today, buildings and structures must be designed and constructed with

*Corresponding author: klmari@ukr.net

protective structures that can defend against external attacks. These may include specialized autonomous protective structures (shelters) or dual-purpose structures.

The Ukrainian government has adopted a number of legislative and regulatory documents that regulate the urgent deployment of a modern network of civil defense protective structures. One of such documents is the Law of Ukraine No. 2486-IX of 29.07.2022 "On Amendments to Certain Legislative Acts of Ukraine on Ensuring the Requirements of Civil Protection in the Planning and Development of Territories". This document envisages the mandatory construction of reliable shelters in both reconstructed and new buildings, considering necessary engineering and technical measures for civil defense [1]. Additionally, the new State Building Code DBN V.2.2-5:2023 "Protective Structures for Civil Defense" came into effect in November 2023 [2]. This document regulates the main provisions regarding the design of protective structures for civil defense and dual-purpose structures which are intended for sheltering the population. These norms were developed in accordance with the requirements of the Civil Protection Code of Ukraine [3]. The provisions of these norms determine that protective structures and dual-purpose structures are designed and built to create appropriate conditions for people to stay in a shelter within a certain time (up to 48 hours). During this time it is necessary to reduce the effects of dangerous factors that may arise in case of emergency, military (combat) actions and terrorist acts [2].

In spite of these regulations, there aren`t protective premises in most Ukrainian residential buildings. Even if there are some protective premises, the conditions for people to stay during emergency aren`t ensured. Therefore, residents of such buildings have to use collective civil defense shelters, which were built in Soviet times. The main problem of these defense shelters are their location. Usually such collective shelters were built as one shelter for a few buildings and often one shelter - for a whole residential development and located without quick accessibility. For this reason, most Ukrainians ignore air raid alerts or, in better cases, use the 'two walls' rule and try to find safer places in their apartments.

The purpose of this study is to develop an architectural and construction solution for protecting civilian population in a multi-story residential building by creating an instantly accessible safe space.

2 Past and present experience in the design and construction of protective structures

The main types of protective structures include [4]: specialized protective structures such as shelters or anti-radiation shelters; non-specialized structures that include dual-purpose structures, and the simplest shelters.

The first bomb shelters were built during the First World War. It was during the First World War that the use of strategic air strikes against the population began. Most countries around the world did not have any protection programs at that time, and such strikes caused a lot of civilian casualties. The underground subway was the prototype of a bomb shelter in the 1920s to 1940s, but it couldn't provide safety and protection for 100% of citizens.

The first individual shelters were built during the Second World War in Great Britain. They were developed and widely spread in the UK in accordance with a government program. These are quickly erected simple shelters, often prefabricated that protected from shell fragments and blast waves. Such shelters had prefabricated structure and were manufactured at the factories. The Anderson shelter, the Stanton shelter, and the Morrison shelter were particularly popular [4-7]. These shelters could accommodate one or more people, up to six, and were used in almost every household (Fig. 1).

a b c

Fig. 1. Individual shelters in Great Britain during the Second World War: a − Anderson shelter [4], b − Morrison shelter [4], c − Stanton shelter [7]

Another interesting solution was bomb shelter towers designed by Leo Winkel and Paul Zombeck (Germany) (Fig. 2) [8, 9]. “Winkel” bunkers are above-ground structures designed to protect staff in large industrial enterprises and important institutions in Germany, as well as inhabitants from some nearby residential buildings. Their structural feature was the conical shape of the building, with small dimensions on plan − up to 30 meters in diameter, making it less vulnerable during air attacks. They had thick walls ranging from 1.5 meters at the base of the building to 1.0 meter at the top. The towers were 20 m high. According to the architect Leo Winkel, the resistance of such towers to air bombs was quite high due to their conical shape and small size on plan. At the same time, the cost of construction and operation of such shelters was several times less than the cost of underground shelters of similar size.

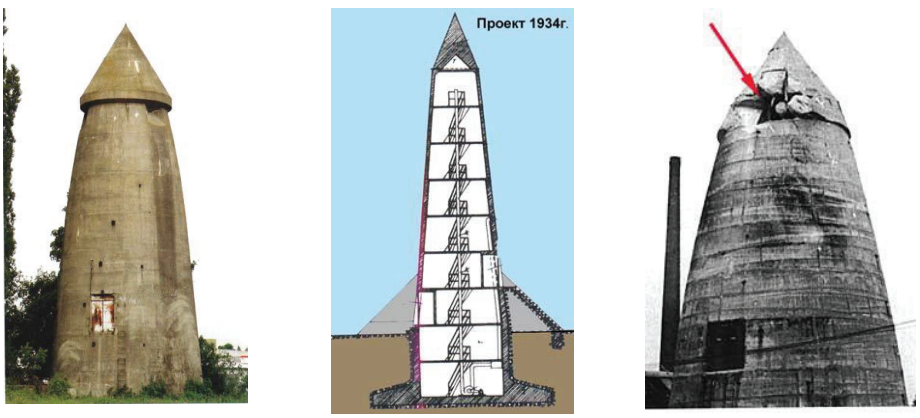

a b c

Fig. 2. Shelter tower designed by Leo Winkel (1934): a − general view of the shelter tower; b − the section cross of shelter tower; c − the result of a bomb hitting the structure of the tower in Bremmen (1944) [8]

Modern bomb shelters are protective structures designed for collective or individual use, equipped with various autonomous engineering systems to protect the population from various types of hazards over a certain period of time. Such countries as Switzerland, Finland, Israel, and Singapore pay significant attention to the construction and operation of civil defense shelters is paid. At the same time, individual shelters are more popular in Israel and Singapore. A series of regulatory acts were adopted in these countries to provide the design and construction of civil defense shelters in each building or apartment.

According to the Singapore Civil Defense Shelter Act, since 1997 all new buildings must have a shelter. This can be a household shelter − a shelter built into each apartment, or a floor shelter − a shelter for residents of several apartments, usually located on the same floor or in the same section of the building. The features of such a household and storey shelters are reinforced walls and ceilings by increasing the thickness of the structure, separation of these

premises from the building facade, and the use of doors made of protective steel. The reinforced concrete is the main material for bearing structures of the shelter. Technical requirements for the design of such shelters regulate the location of the shelter within the living space, and also the distance to the external structures of the building. These shelters provide protection for residents from the effects of weapons, explosions, and shrapnel during emergencies. The greatest advantage of such shelters is their accessibility [10-13].

Today in Ukraine, Israel's experience of population protection is increasingly discussed. There are three types of shelters in Israel: the “MerhavMuganDirati” or “Mamad” (safe room) − an individual room within an apartment; “Mamak” floor shelters − communal shelters in multi-apartment buildings; and “Maman” protective shelters − used in public buildings [14-17]. It also should be noted that underground public bomb shelters aren`t almost applied. On the contrary, preference is given to individual safe rooms. This decision is driven by many factors, but the main ones are the rational assessment of the most common threats during bomb attacks, as well as considering the time needed for civilians to seek shelter in real conditions. The minimum size of a safe room is no less than 9 square meters, with a ceiling height of no less than 2.5 meters. Safe rooms can be used as regular premises during peacetime, where technical rooms or children's bedrooms are located. However, to install kitchens and bathrooms in such rooms is prohibited.

3 Architectural and structural solution of a safe space for the protection of inhabitants in a multi-storey residential building

3.1 Peculiarities of architectural and structural solution of the safety capsule

The design solutions of the universal “safety capsule” with detail planning of indoor space for 10 and 20 people for multi-storey residential buildings were developed based on past and modern experience.

The “safety capsule” is a dual-purpose civil defense protective structure, which is used by the residents of the building as a shelter during emergencies. In peacetime, these premises can be used to store bicycles, prams, etc. The safety capsule consists of a main room with two-tiered accommodation, where sleeping space makes 20% of the available space, and auxiliary premises including a restroom and a room for additional equipment, storage of food and water supplies.

The proposed design solution of the safety capsule has several features. Firstly, the curvilinear shape of the outer enclosure allows perceiving better the load from the blast wave and the hit of shell fragments. Secondly, unification of all dimensions and bringing them to a single modular system improve significantly the integration of these design solutions into the space-planning structure of any building (Fig. 3a).

Placement of safe spaces is provided on each floor in the elevator and staircase area of the house. This layout has the following advantages. Firstly, an elevator and a staircase unit are usually located inside the building with approximately the same distance from the front door of all apartments. Secondly, the staircase is an important escape route and the placement of a shelter next to it, if necessary, reduces the distance and time of evacuation (Fig. 3b).

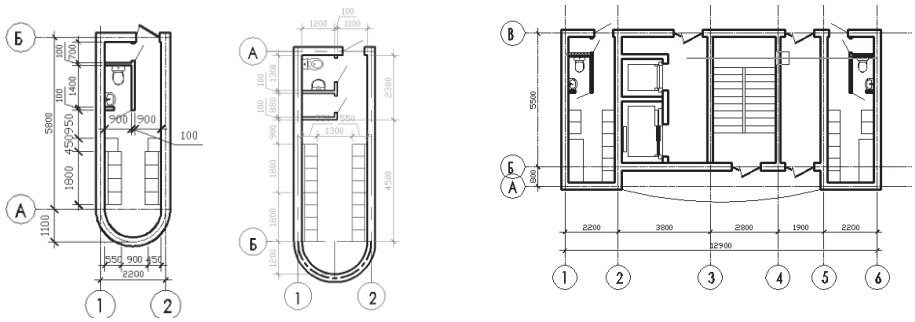

Fig. 3. Architectural and structural solution of the safety capsule: a - safety capsules for 10 and 20 people; b – the layout of safety capsules on the floor plan of the building

The developed architectural and structural solution of the safe space with instant accessibility in a multi-storey residential building has the following advantages:

- quick access to the shelter for the occupants of the building. A safety capsule is located on each floor of the building and is designed for the number of residents;
- structural independence. The structural elements of the safety capsule are independent from other structural elements of the building. The safety capsule has its own walls, floors, foundation made of reinforced concrete.
- functional independence. Safety capsules have individual utilities that are connected to centralized systems, and in case of emergencies, are additionally equipped with batteries for autonomous power supply, ventilation system with air purification and water reserve.
- adaptability to the architectural and planning structure of the building. The proposed safety capsules are designed in such a way that they can be easily applied to any planning structure of the building due to the unified dimensions.

3.2 Integration of design solutions of "safety capsules" into space-planning structure of the buildings

In this study two variants of integrating the proposed safety capsule into the space-planning structure of a multi-storey residential building were developed.

The first variant is a 12-storey residential building with 60 apartments with a simple configuration in the plan. This can be a typical section of a multi-section residential building.

The second variant is a 16-storey residential building with 126 apartments that has a complex configuration in the plan and consists of two symmetrical sections.

According to DSTU 8855:2019 Determination of the class of consequences (liability), the number of people who are permanently in the building can be defined as the number of people who stay in the building for 8 or more hours per day and at least 150 days per year (a total of at least 1200 hours per year) [18].

The total number of residents N1 can be determined on the basis of the area of flats of the building. According to the DSTU, the floor area per person is 21 m² and an additional 10.5 m² per family. The number of residents N_1 for two variants of buildings was determined by the formula:

$$N_r = (X_1 - 10{,}5 \cdot X_2), \tag{1}$$

where: N_r is the estimated number of residents of the building; X_1 is total area of apartments in the building, m²; X_2 is the total number of apartments in the building.

The results of the estimated number of inhabitants in the buildings under consideration are presented in table 1 and table 2.

The required capacity of the safety capsule for each floor is determined in accordance with:

$$N_f = \frac{N_r}{n_f}, \tag{2}$$

where: N_f − is the estimated number of inhabitants on one floor; n_f − is the number of floors

Table 1. The estimated number of residents for a 12-storey residential building with 60 apartments.

Number of rooms in the apartment	Area of apartments, m²	Number of apartments in building	Total area of apartments in building, m²	Occupancy coefficient per apartment	Accommodation per building, persons
1	43,2 (32,7+10,5)	12	518,4	1,56	19
2	77,7 (67,2+10,5)	24	1864,8	3,2	77
3	107,1 (96,6+10,5)	24	2570,4	4,6	110
Total		60	4953,6		206

Table 2. The estimated number of residents for a 16-storey residential building with 126 apartments.

Number of rooms in the apartment	Area of apartments, m²	Number of apartments in building	Total area of apartments in building, m²	Occupancy coefficient per apartment	Accommodation per building, persons
1	62,9 (52,4+10,5)	14	880,6	2,5	35
2	80,2 (69,7+10,5)	28	2245,6	3,3	93
3	129,2 (118,7+10,5)	28	3617,6	5,6	157
3	119,3 (108,8+10,5)	14	1670,2	5,2	73
4	142,5 (132+10,5)	28	3990,0	6,3	177
5	184,2 (173,7+10,5)	14	2578,8	8,3	116
Total		126	14982,8		701

According to the calculations, the following options of the safety capsules are adopted:

- for a 12-storey residential building − safety capsule for 10 people – 2 per floor;
- for a 16-storey residential building: safety capsule for 25 people – 2 per floor.

According to the design solution, the safety capsules are located in the buildings adjacent to the lift and staircase unit. Safety capsules integrated into the architectural and planning structure of buildings have independent structural elements (walls, beams and floor floors, coverings, foundations), which are connected to the main structures of the building by hinged ties. Visualization of the proposed design solutions is presented in Figures 5 and 6.

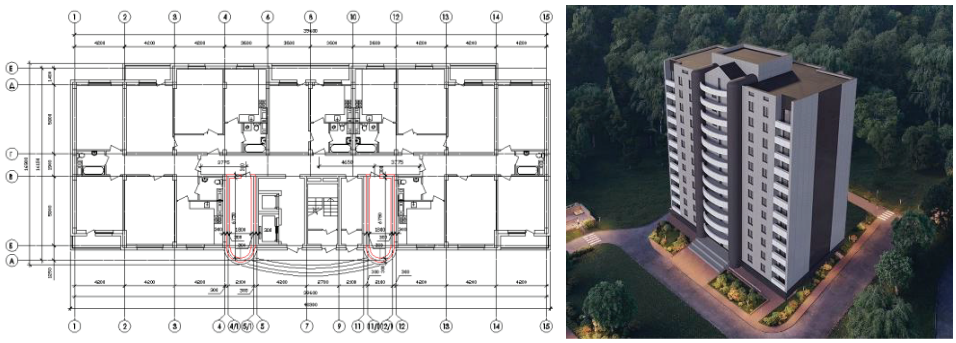

Fig. 4. Integration of the safety capsule into the architectural and planning structure of a 12-story residential building

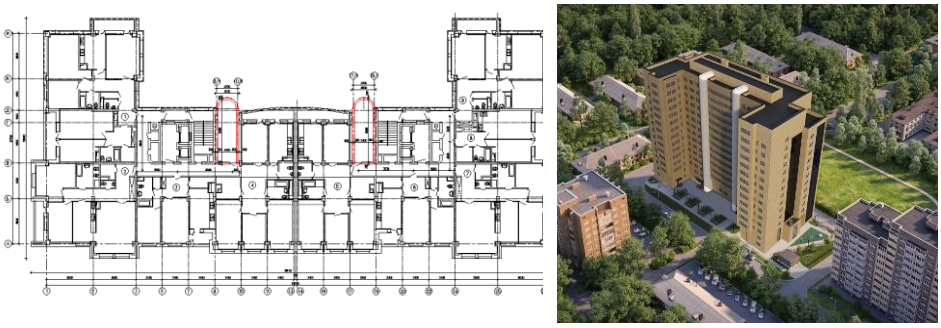

Fig. 5. Integration of the safety capsule into the architectural and planning structure of a 16-story residential building

3.3 Assessment of the rationality of the adopted design solutions safety capsules in multi-storey residential buildings

The rationality of design solutions and the efficiency of the use of internal spaces were assessed in this study. For this purpose, the following coefficients were used:

k1 – a coefficient that shows the efficiency of the installed area of auxiliary premises and is equal to the ratio of the main premises area to the total area of the shelter. The value of coefficient k1 should be 0.5-0.7.

k2 – a coefficient that characterizes the rational placement of persons in the shelter and is equal to the ratio of the shelter total area to its capacity. The value of coefficient k2 should be 0.75-1.2 m²/person.

The assessment results are presented in Table 3.

Table 3. Assessment of rationality of design solutions for safety capsules for multi-storey residential buildings.

Type of building	Total area of the safety capsule, m²	Area of the main premise, m²	k1	k2, m²/person	Volume of space, m³	Volume per person, m³
12-storey residential building	23,6	15,26	0,65	1,18	63,7	3,1
16-storey residential building	37,4	26	0,69	0,93	112,2	2,8

In developed design solutions the areas of the safety capsules are 23.6 m² per floor, 1.18 m²/1 person in a 12-storey residential building; and are 37.4 m² per floor, 0.93 m²/1 person in a 16-storey residential building. According to the state building code, the minimum area per person in the main sheltering space must be at least 0,6 m² for residential buildings, and the minimum volume per person – 1.5 m³. The design solutions, developed in this study, comply with the Ukrainian state building code.

4 Conclusions

In the study the possibility of creating instantly accessible safe spaces was considered to protect residents of multi-storey buildings in emergency situations. The design solution of the safety capsule was developed considering popular international practices of shelter construction. The developed architectural and structural solution of a safe space with instant accessibility in a multi-storey residential building has such advantages as quick access, structural and functional independence, and adaptability to the architectural and planning structure of the building. The design solution was also integrated into planning structure of a building by the example a 12-storey and 16-storey residential buildings. In addition, the rationality of the developed design solutions was assessed. The developed design solutions comply with the parameters of efficiency of internal space for protective structures and are designed taking into account the current construction norms of Ukraine.

References

1. On Amendments to Certain Legislative Acts of Ukraine on Ensuring the Requirements of Civil Protection in the Planning and Development of Territories, Law of Ukraine Document 2486-IX, current, adoption of 29.07.2022. Official web portal of the Parliament of Ukraine. https://zakon.rada.gov.ua/laws/show/2486-20 (Accessed: 6th May 2024).
2. State Building Code DBN V.2.2-5:2023, Protective Structures for Civil Defense. https://ips.ligazakon.net/document/DBN00101 (Accessed: 6th May 2024).
3. Civil protection code of Ukraine. Document 5403-VI, valid, current edition - Edition dated 19.04.2024. https://zakon.rada.gov.ua/laws/show/5403-17#Text (Accessed: 6th May 2024).
4. Shelter at home in the Second World War. The History Press (2024). https://thehistorypress.co.uk/article/shelter-at-home-in-the-second-world-war/ (Accessed: 6th May 2024).
5. The difference between Anderson and Morrison Air Raid Shelters during the Second World War: Blog. Blog. Findmypast.co.uk. https://www.findmypast.co.uk/blog/history/anderson-and-morrison-air-raid-shelters-and-the-british-public (Accessed: 6th May 2024).
6. Morrison shelters. Anderson Shelters. https://andersonshelters.org.uk/other-shelters/morrison-shelters/ (Accessed: 6th May 2024).
7. Air Raid Shelter. Wikipedia (2024). https://en.wikipedia.org/wiki/Air_raid_shelter (Accessed: 6th May 2024).
8. Y.G. Veremeev, Y.I. Martynenko, Luftschuetztuerme der Bauart Winkel (LS-Turm Winkel). Air raid shelters of the Winkel project in Germany 1936-1945. http://army.armor.kiev.ua/fort/winkel-01.php (Accessed: 6th May 2024).

9. M. Foedrowitz, Die Luftschutztürme der Bauart Winkel in Deutschland 1936 bis heute. Waffen und Fahrzeuge der Heere und Luftstreitkräfte, Waffen-Arsenal. Band 175. (Friedberg, Podzun-Pallas Verlag, 1998).
10. Technical requirements for household shelters. Civil defence shelter. SCDF. https://www.scdf.gov.sg/docs/default-source/scdf-library/fssd-downloads/technical-requirements-for-household-shelters-2023.pdf (Accessed: 6th May 2024).
11. Technical requirements for storey shelters (2021). Civil defence shelter. SCDF. https://www.scdf.gov.sg/home/civil-defence-shelter/acts-and-requirements (Accessed: 6th May 2024).
12. Welcome to Singapore, where new apartments come with bomb shelters. VICE (2018). https://www.vice.com/en/article/ne9adq/welcome-to-singapore-where-new-apartments-come-with-bomb-shelters (Accessed: 6th May 2024).
13. What you can (and cannot) do with your HDB household shelter. Qanvast (2024). https://qanvast.com/sg/articles/what-you-can-and-cannot-do-with-your-hdb-household-shelter-2445 (Accessed: 6th May 2024)
14. UTG initiates changes to the standards of zoning, design and construction. UTG (2022). https://utgcompany.com/kompaniia-utg-initsiiuie-vnesennia-zmin-v-standarty-zonuvannia-terytorij-proektuvannia-ta-budivnytstva/ (Accessed: 6th May 2024)
15. K. Tangalakis-Lippert, Safe Rooms in Israel are everywhere, with steel doors and sparse furnishings. Here's what they're like inside. Business Insider. https://www.businessinsider.com/photos-inside-safe-room-bomb-shelter-israel-war-palestine-gaza-2023-10 (Accessed: 6th May 2024)
16. Safety rooms and their purpose when installed in multi-storey buildings. Shelters for apartment buildings. https://ukryttia.com.ua/gotov%D1%96-r%D1%96shennya/dlya-bagatokvartirnix-budink%D1%96v.html (Accessed: 6th May 2024)
17. Civil defense in Israel. Wikipedia (2023). https://en.wikipedia.org/wiki/ Civil_defense_in_Israel (Accessed: 6th May 2024)
18. State Building Code DSTU 8855:2019 Determination of the class of consequences (liability). https://dbn.co.ua/load/normativy/dstu/8855_viznachennja_klasu_naslidkiv/5-1-0-1851 (Accessed: 6th May 2024)