Information modeling of the foundation of a special-purpose industrial building

Volodymyr Sedin[1*], *Vitaliy* Zahilsky[2], *Andrii* Tytiuk[2], *Vladyslav* Kovba[1], and *Yuliia* Vershkova[3]

[1]Prydniprovska State Academy of Civil Engineering and Architecture, Engineering Geology and Geotechnics Dept., 49005 Architect Oleh Petrov Str. 24-a, Dnipro, Ukraine
[2]Prydniprovska State Academy of Civil Engineering and Architecture, Descriptive Geometry and Graphics Dept., 49005 Architect Oleh Petrov Str. 24-a, Dnipro, Ukraine
[3]Prydniprovska State Academy of Civil Engineering and Architecture, Reinforced Concrete and Stone Structures Dept., 49005 Architect Oleh Petrov Str. 24-a, Dnipro, Ukraine

Abstract. The paper considers the peculiarities of construction of special structures based on individual projects and requiring non-standard approaches to design and calculation due to unique loads and impacts on the structure. The author emphasizes the importance of transferring design to the field of virtual building information model (BIM) to ensure a high level of detail, accurate calculation of materials and works, as well as the possibility of making changes to the BIM model for further monitoring of the life cycle of the structure. It is noted that the use of BIM programs allows to effectively take into account all components of the structure and minimizes technical errors in the coordination of engineering networks with structural drawings. The purpose of this paper is to analyze the results of building design using computer-aided design (CAD) and building information modeling (BIM) systems. The work is aimed at studying the efficiency and accuracy of the design performed using CAD technologies and comparing it with the results obtained through the use of BIM modeling. Changes that occur to the building and are not foreseen in the original design can be incorporated into the model, which ensures that the information is up-to-date and relevant throughout the entire life cycle of the building.

1 Introduction

In today's innovative world, where technologies are constantly evolving, modernization of design processes is becoming a key component of the successful development of the construction industry. In particular, in the context of designing special-purpose buildings, where individuality and non-standardization require unique approaches, it is important to move from traditional methods to the use of modern technologies, in particular, building information models (BIM).

* Corresponding author: m.onmu@ukr.net

While noting the importance of modernization, it should be noted that this transition helps to improve the quality and efficiency of the design process, providing an opportunity to accurately reflect all aspects of construction in the information model. Virtual engineering modeling allows not only to create detailed and realistic models of structures, but also to avoid routine errors that can occur with traditional methods.

One of the key advantages of BIM is the ability to track and correct changes throughout the entire life cycle of a building. Reproducing an accurate model allows you to respond quickly to any changes, reducing the number of errors and improving the overall reliability of structures.

This modernization not only increases the speed and efficiency of work, but also opens up new opportunities for improving the quality of construction. Stand-alone and non-standard special structures that require an individual approach are embodied in the virtual domain, where BIM modeling allows you to accurately take into account all the nuances of structures, loads, and utilities.

In addition, an important aspect is to ensure the integration of construction industry engineering with the engineering of special-purpose facilities. The parallel development of equipment and utility models, paying attention not only to their placement but also to the convenience of transportation, is becoming an important step in ensuring the optimization and safety of the construction process.

Thus, the modernization of the design processes for special buildings not only ensures the improvement of technical aspects, but also opens up new horizons for integration and cooperation between civil engineers and special purpose engineers.

Therefore, in the context of special buildings, the use of BIM modeling is an important step in the development of the construction industry aimed at improving the efficiency, safety and accuracy of design.

2 Problem statement

Special-purpose buildings, unlike typical buildings, have unique operational requirements, which necessitates non-standard design approaches. This research paper explores the design features of such buildings, as well as the benefits of implementing a virtual building information model (BIM) to improve the quality and efficiency of design, construction, and operation.

The article discusses the peculiarities of building special structures that are based on individual projects and require non-standard approaches to design and calculations due to unique loads and impacts on the structure. Particular attention is paid to ensuring the strength, rigidity and stability of special buildings, which is regulated by relevant documents and takes into account the characteristics of the material, bearing capacity and manufacturing methods. The author emphasizes the importance of transferring design to the field of virtual building information model (BIM) to ensure a high level of detail, accurate calculation of materials and works, as well as the possibility of making changes to the BIM model for further monitoring of the life cycle of the structure. It is noted that the use of BIM programs allows to effectively take into account all components of the structure and minimizes technical errors in the coordination of engineering networks with structural drawings. The paper emphasizes the relevance of introducing such technologies to improve the quality and efficiency of the design, construction and operation of special-purpose buildings [1].

The purpose of this paper is to analyze the results of building design using computer-aided design (CAD) and building information modeling (BIM) systems. The work is aimed at studying the efficiency and accuracy of the design performed using CAD technologies and comparing it with the results obtained through the use of BIM modeling. The research will consider the advantages and limitations of each approach, as well as the impact of their

application on the quality and productivity of building projects. The analysis will focus on identifying opportunities to optimize structures, ensure the accuracy of calculations, and manage construction project processes. The results will help to identify the advantages and limitations of each technology, as well as indicate the optimal way to use CAD and BIM in the field of building design, contributing to the quality and efficiency of construction projects.

3 Results and discussions

Based on the chosen approach to modernizing the design of special-purpose buildings, a detailed analysis of the structural element of the special-purpose building - the pile foundation - was carried out. As part of this project, it was decided to use bored reinforced concrete piles. It is noted that the choice of this structural element is due to its optimal technical characteristics in accordance with the design requirements [1, 2].

The project provides specifications for calculating the volume of material consumption, and a detailed calculation of concrete and steel consumption for the pile foundation. Revit introduces an automated approach to creating specifications and calculations, which is significantly different from traditional manual design methods. One of the key advantages of using Revit is its ability to automatically generate specifications based on building model parameters.

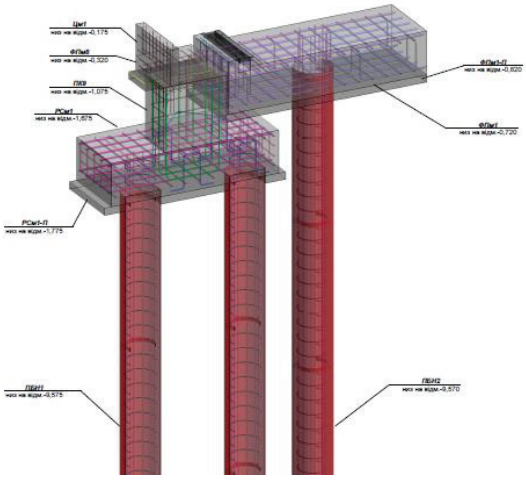

Fig. 1. 3D view of the piles

While working in the information model (in this case, Revit was used), the engineer can determine the materials, dimensions, and other characteristics of the building structure elements. The program automatically takes this data into account and generates accurate and consistent specifications. This process is not only efficient, but also significantly reduces the likelihood of human error that can occur with manual calculations.

Compared to manual calculation, the use of BIM technology provides significant time savings, as the automated process eliminates the need for re-entering data and complex calculations.

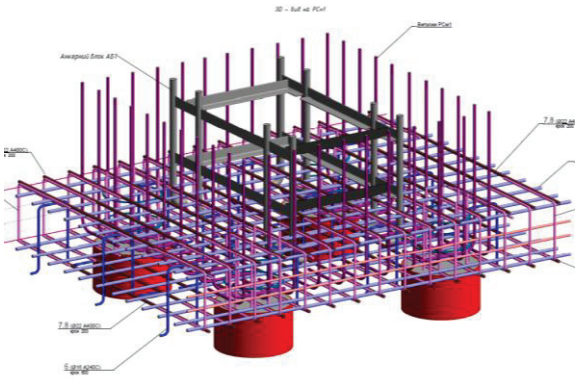

Fig. 2. Visualization of reinforcement

Thanks to the built-in integration, the engineer can easily update and make changes to the building model, and all specifications automatically adapt to these changes. This helps to avoid discrepancies and inconsistencies in the design process (Fig. 1).

Thus, using Revit to automatically calculate and create specifications leads to more accurate and efficient results compared to a manual approach (Fig. 2).

Data on steel consumption per element, kg

Brand of construction	Armature products							Embedded products					Total expenditure
	Class armature						In total	Class armature		Metal		In total	
	A240			A400				O9G2C		C245			
	GOST 5781-82			GOST 5781-82				GOST 5781-82		GOST 8509-93			
	Ø10	Ø12	In all	Ø10	Ø16	In all		M46	In all	L70x6	In all		
PC1	111,8	16,4	128,2	13,2	83,2	96,4	224,6	241,6	241,6	54,8	54,8	296,4	521,0

Fig. 3. Specification calculated by traditional methods PK1

Data on steel consumption per element, kg

Brand of construction	Armature products							Embedded products					Total expenditure
	Class armature						In total	Class armature		Metal		In total	
	A240			A400				A240		C245			
	GOST 5781-82			GOST 5781-82				GOST 5781-82		GOST 8509-93			
	Ø10	Ø12	In all	Ø10	Ø16	In all		Ø48	In all	L70x6	In all		
PC1	116	16,8	132,8	13,9	82,4	96,3	229,1	241,6	241,6	56,4	56,4	298	527,06

Fig. 4. Specification in BIM modeling PK1

Comparing the structural element PC1 in the context of steel consumption between the manual and automatic (carried out within BIM modeling), the significant efficiency of the automated approach is revealed. The manual calculation indicates a steel consumption of 521 kg, while the automatic generation of BIM specifications indicates a consumption of 527.06 kg. The percentage of steel consumption in the automatic calculation is as follows:

$$(527{,}06 - 521{,}0) : 527{,}06 \cdot 100\ \% = 1{,}19\ \%. \quad (1)$$

This indicates that automatic calculation of steel consumption in BIM leads to an increase in the amount of steel used by approximately 1.19% (Fig. 3, 4).

In the case of this special-purpose building project, the number of structural elements of PC1 is 16, and the difference in steel consumption between the manual and automatic calculation is:

$$16 \cdot (527{,}06 - 521{,}0) = 16 \cdot 6{,}06 = 96{,}96\ (\text{кg}). \quad (2)$$

Thus, the automated design approach in BIM increases steel consumption by approximately 100 kg of steel for only one type of structural element.

To calculate the value of this difference, it is necessary to take into account market steel prices for the amount of steel saved.

In the context of concrete consumption in BIM and manual calculation for one element of PC1, it turns out that in the automated calculation the consumption is 4.08 m³, while in the manual calculation it is 4.1 m³.

This indicates that the automated calculation of concrete consumption in BIM is almost the same as the manual calculation − the difference is approximately 0.49%.

Given that there are 16 structural elements in the PC1 project, the difference in concrete consumption between the manual and automatic calculation is 0.32 m³.

This trend is observed for parts PC2 and PC5 between BIM modeling and the traditional calculation method, which is 4.6 kg per part. In terms of percentage, this is 0.45%, and concrete consumption in BIM modeling is 0.2 m³ less per unit of construction (Fig. 5, 6).

Data on steel consumption per element, kg

Brand of construction	Armature products								Embedded products											Total expenditure
	Class armature							In total	Class armature					Metal					In total	
	A240C			A400C					09Г2С			AIII		C245						
	DSTU 3760:2006			DSTU 3760:2006					DSTU 24379.1:2008			GOST 5781-82		DSTU 8540:2015		DSTU 2251-93				
	Ø10	Ø12	In all	Ø10	Ø12	Ø16	In all		Ø24	Ø56	in all	Ø12	in all	t8	in all	L70x6	in all			
PC2	116	16,8	132,8	20,8	12,8	82,4	115,9	248,7	12,8	449,6	462,4	1,16	1,16	3,74	3,74	54,8	54,8		522,1	770,84

Fig. 5. Specification in BIM modeling PK2

Data on steel consumption per element, kg

Brand of construction	Armature products								Embedded products											Total expenditure
	Class armature							In total	Class armature					Metal					In total	
	A240C			A400C					09Г2С			AIII		C245						
	DSTU 3760:2006			DSTU 3760:2006					DSTU 24379.1:2008			GOST 5781-82		DSTU 8540:2015		DSTU 2251-93				
	Ø10	Ø12	In all	Ø10	Ø12	Ø16	In all		Ø24	Ø56	in all	Ø12	in all	t8	in all	L70x6	in all			
PC2	111,8	16,4	128,2	21,0	13,0	83,2	117,2	245,4	12,8	449,6	462,4	1,3	1,3	3,1	3,1	54,4	54,4		520,8	766,2

Fig. 6. Specification calculated by traditional methods PK2

Structural element PC3 in the context of steel consumption between manual and automatic (carried out within BIM modeling), the significant efficiency of the automated approach is revealed. The manual calculation indicates a steel consumption of 558 kg, while the automatic generation of BIM specifications indicates a consumption of 555 kg per structural element.

This indicates that the automatic calculation of steel consumption in BIM results in a 3 kg reduction in the amount of steel used and a 0.2 m³ reduction in concrete consumption.

For the structural element PC4, the calculations of steel consumption in BIM and manual calculation indicate a percentage difference of about -0.77% (consumption in BIM 1977.2 kg, manual calculation 1962.1 kg). Such a small deviation may be due to more accurate calculations and optimization of structures provided by the use of BIM technology.

Based on the analysis of structural elements PC6 and PC7, it was found that the trend of increasing steel consumption in BIM modeling compared to the traditional calculation method is also observed. For example, the percentage difference for PC6 was about 0.89%, and for PC7 − about 0.95%. These deviations, although not significant on an overall scale, indicate a systemic pattern in the effectiveness of BIM modeling, especially in terms of refining steel consumption.

It is worth noting that a reduction in concrete consumption for all products by 0.2-1 m³ was found in BIM modeling compared to the traditional method. This confirms the positive impact of BIM on optimizing the use of construction materials and resources, ensuring more efficient design and calculation processes.

The conclusions from the data provided indicate a significant refinement of the composition of drawings when using BIM modeling, which will potentially lead to a reduction in the cost of corrections in project documentation and estimates.

A separate aspect of the study includes the development of nodal connections for pile foundations using CAD and BIM technologies. In the context of BIM modeling of nodal joints, obtaining a three-dimensional representation of the node goes beyond the traditional approach to design, providing a real and detailed image of the structure. Taking into account the peculiarities of obtaining a three-dimensional representation of a node, it greatly facilitates the presentation and perception of its structure, which helps builders on the site to accurately understand the meaning of the drawings, the correct location of parts, and avoids errors caused by the human factor (Fig. 7).

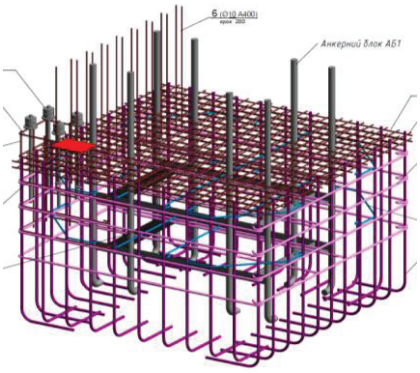

Fig. 7. 3D model of the PK3

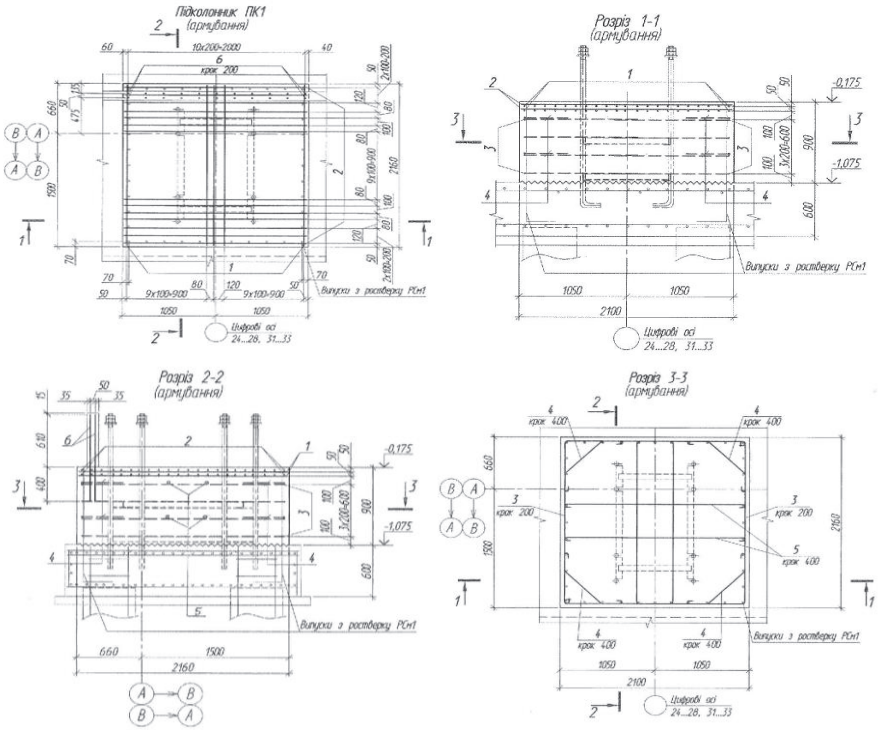

Fig. 8. Designing a PK1 using traditional methods

It should be noted that this three-dimensional view of the model allows you to accurately determine the geometric location of reinforcing rods, embedded parts, and other components, which is key to solving engineering and design problems. In particular, it is important to note the ability to quickly and efficiently create any sections and cross-sections of the assembly during the design of drawings (Fig. 8, 9).

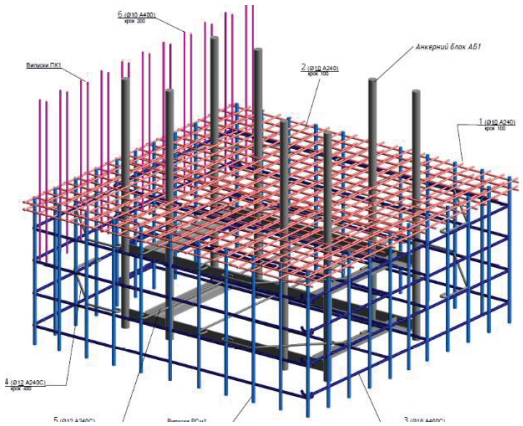

Fig. 9. 3D model of the PK1

When using BIM modeling, the risk of overlap between different elements of the assembly is reduced due to the interactive three-dimensional view, eliminating errors that can occur in traditional design methods where the exact location and interaction of elements may be less obvious [5].

Embedded parts and openings for utility holes and communications are defined as a separate item in the design of special purpose buildings. One of the key aspects of this stage is the location of these details on the site (Fig. 10, 11).

At the design stage, civil and special purpose engineers can work in parallel to develop models and take into account the dimensions of openings and utilities. This allows them to foresee not only the arrangement of the openings themselves, but also to ensure the convenience of transportation of equipment used in special-purpose facilities.

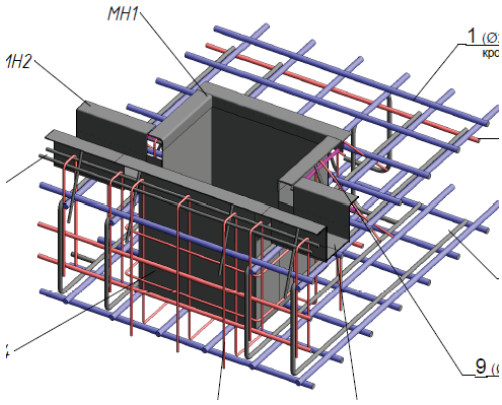

Fig. 10. Embedded parts for the drainage system

This parallel approach facilitates the interaction of different engineering teams and ensures the optimal use of space and equipment within the facility.

Thus, the nodal connections in the BIM model not only represent structural complexity, but also contribute to the efficient resolution and management of various design aspects,

which increases the overall level of productivity and accuracy in the development of building solutions [3].

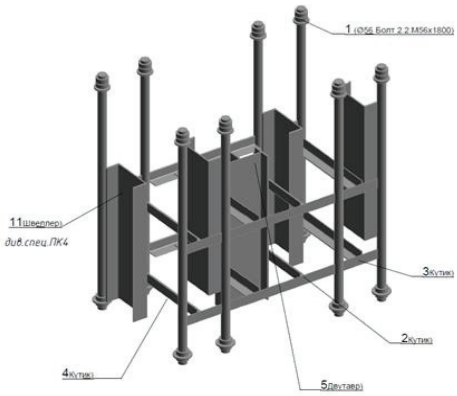

Fig. 11. Embedded parts in the grillage

Another important aspect of creating an information model is the ability to track changes and the condition of the building during its lifetime. Changes that occur to the building and are not foreseen in the original design can be made to the model, which allows to ensure the relevance and relevance of information throughout the entire life cycle of the building.

This also makes it possible to quickly recalculate the load-bearing capacity of a structure when changes are made. This feature becomes important in the case of modernizations, reconstructions, and assessments of the technical condition of special-purpose structures.

Thanks to the information model, engineers and managers can quickly respond to changes, make the necessary adjustments, and make informed decisions to maintain optimal efficiency and safety of the structure throughout its operational period [4].

The use of BIM in the future has the potential to automate the work of an engineer not only at the design stage but also during the inspection of the technical condition of structures. Thanks to the presence of a three-dimensional model, which already includes all production holes that are not provided for in the project, the expert can more accurately determine the origin of defects that occur in the structures of special-purpose structures. This simplifies and speeds up the process of identifying and analyzing potential problems.

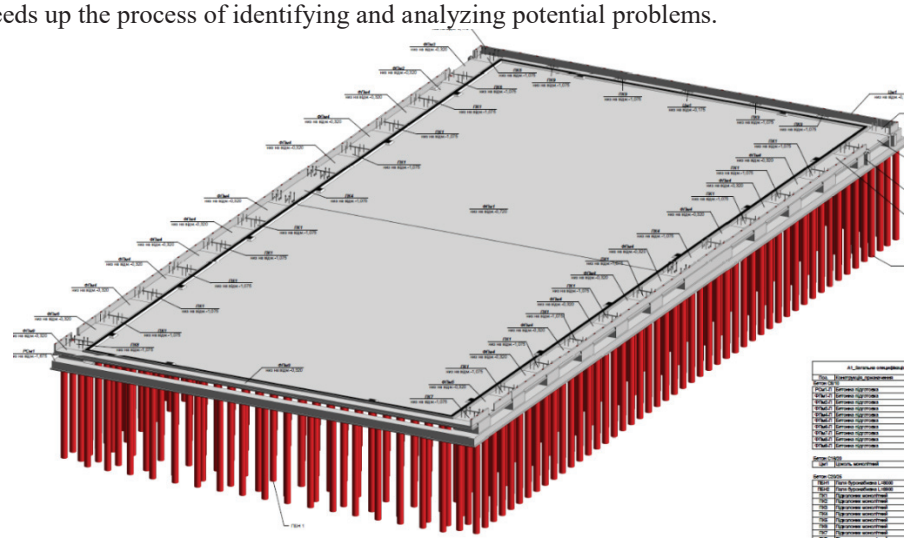

Fig. 12. Embedded parts in the grillage

The importance of using BIM is especially evident during reconstruction and restoration of buildings after rocket attacks. In such situations, where the destroyed parts of structures can be unpredictably complex and require quick and effective intervention, the use of BIM allows for quick and accurate damage modeling, assessment of the degree of structural damage, and planning of restoration measures (Fig. 12).

Unlike traditional methods, BIM allows you to navigate the workspace and tailor the restoration process to all structural features. This saves time and resources, simplifying the work of engineers and providing more accurate and timely results [6].

In cases of rocket attacks, where even small changes in structures can have a serious impact on their functionality and safety, BIM becomes a necessary tool for the effective restoration and reconstruction of special structures.

One of the potential prospects for development in the field of inspection and monitoring is the active implementation of mechanized methods using drones and 3D space construction technologies. These innovative approaches not only provide a convenient and efficient inspection of objects, but can also become the basis for further automation of building information modeling [7].

In the future, the automation of this process may reach a level where existing defects and damage detected by drones and other technical means will be automatically entered into the information model. This will not only accurately reflect the real state of structures, but also automatically generate reports and technical condition certificates, simplifying and speeding up the entire process.

This approach will allow for faster generation of reports and technical condition certificates, providing customers, engineers and regulators with accurate and up-to-date data to make decisions on the maintenance, reconstruction or modernization of special structures.

4 Conclusions

The analysis of various aspects of the use of CAD technologies and building information modeling (BIM) in the design and inspection of special-purpose buildings has revealed numerous advantages of these methods.

BIM technologies provide an opportunity for more accurate and efficient design, as well as taking into account the structural features of pile foundations, such as nodal connections and utilities. Automated calculations in BIM provide more accurate results compared to manual calculations and other CAD systems.

The use of BIM modeling facilitates project management, provides a convenient three-dimensional view, and avoids overlaps and errors during the design and construction stages. It is also important to note that changes can be made to BIM at any stage, which greatly facilitates the introduction of corrections and modifications to the project.

In the context of material costs, it was found that the difference in steel and concrete costs between BIM modeling and traditional methods is small, but it can lead to a reduction in construction material costs. A detailed analysis showed that in practice these differences are almost imperceptible, but in the context of large-scale projects they can be significant.

It should also be noted that the use of BIM in the construction industry can be effective in reconstructing and restoring buildings after rocket attacks. Thanks to accurate information about the state of structures in three-dimensional space and the ability to make changes at any time, the workflow becomes more efficient and adaptable to changing conditions.

It is important to note that the use of BIM modeling not only helps to optimize the design and construction processes, but also facilitates the maintenance and servicing of structures in the future. The availability of detailed information about all aspects of structures in three-dimensional space allows you to effectively track changes made in the operational process and quickly respond to any malfunctions or maintenance needs.

Another important advantage of BIM is the ability to automate the survey in the future, using drones and subsequently adding existing defects to the model. This expands the ability to identify problems and improves the process of managing the technical condition of buildings, which is critical for long-term operation and reconstruction.

Clarification of the composition of drawings, which leads to a reduction in the cost of corrections in project documentation and estimates, indicates a significant positive effect in terms of time and resources, as well as solving the problem of errors that can occur when making manual changes.

In general, the scientific analysis shows that the use of CAD and BIM technologies in the construction industry has significant potential to improve the processes of design, construction, maintenance and reconstruction of special-purpose facilities. These innovative methods not only reduce the number of errors and optimize costs, but also provide an opportunity to interact more effectively with the facility, reducing risks and improving the overall quality of construction and operation of structures.

References

1. DBN V.2.1-10: 2018, Bases and foundations of buildings and structures. Basic provisions. Ministry of Regional Development of Ukraine, Kyiv (2018). https://dreamdim.ua/wp-content/uploads/2018/12/DBN-V2110-2018.pdf
2. DSTU B V.2.1-30:2014, Soils. Methods for measuring deformations of the foundations of buildings and structures. Ministry of Regional Development of Ukraine, Kyiv (2015). https://online.budstandart.com/ua/catalog/doc-page?id_doc=59085
3. DBN V.2.6-198:2014, Steel structures. Design standards. Ministry of Regional Development of Ukraine, Kyiv (2014). https://uscc.ua/uploads/page/images/normativnye%20dokumenty/dbn/dbn-v-2-6-198-2014-stalnyie-konstruktsii-normy% 20-i-proektirovaniya.pdf
4. DBN V.1.2-2:2006, System of ensuring the reliability and safety of construction facilities. Loads and impacts. Design standards. Ministry of Construction of Ukraine, Kyiv (2006). https://document.vobu.ua/wp-content/uploads/DBN/37.1.-DBN-V.1.2-22006.-SNBB.-Navantazhennya-i-vplivi.-Nor.pdf
5. DBN A.2.2-3:2014, Composition and content of project documentation for construction. Ministry of Development of Communities and Territories of Ukraine, Kyiv (2022). https://e-construction.gov.ua/files/new_doc/3022061165539755805/2023-01-24/e1b8ce85-2a40-4095-a380-9e5d9c637912.pdf
6. Chuck Eastman, Paul Teicholz, Rafael Sacks, Kathleen Liston, BIM handbook : a guide to building information modeling for owners, managers, designers, engineers, and contractors. Published by John Wiley & Sons, Inc., Hoboken, New Jersey Published simultaneously in Canada, 485 (2008). ISBN: 978-0-470-18528-5. https://archive.org/ details/bimhandbookguide0000unse
7. DSTU-N B V.1.2-18:2016, Guidelines for the inspection of buildings and structures to determine and assess their technical condition. State Enterprise “Ukrainian Research and Training Center”, Kyiv (2016). https://pdf.sop.zp.ua/standart_dstu-n_b_v_1_2-18_2016.pdf